Pushing Performance

People | Power | Partnership

HARTING
Circular Connectors

Contents

Chapter

Transforming customer wishes into concrete solutions

The HARTING Technology Group is skilled in the fields of electrical, electronic and optical connection, transmission and networking technology, as well as in manufacturing, mechatronics and software creation. The Group uses these skills to develop customized solutions and products such as connectors for energy and data-transmission/data-networking applications, including, for example, mechanical engineering, rail technology, wind energy plants, factory automation and the telecommunications sector. In addition, HARTING also produces electro-magnetic components for the automobile industry and offers solutions in the field of housing technology and shop systems.

The HARTING Group currently comprises 58 sales companies and production plants worldwide employing a total of about 5,300 staff.

HARTING Subsidiary HARTING Representation

We aspire to top performance.

Connectors ensure functionality. As core elements of electrical and optical termination, connection and infrastructure technologies, they are essential in enabling the modular construction of devices, machines and systems across an extremely wide range of industrial applications. Their reliability is a crucial factor guaranteeing smooth functioning in the manufacturing area, telecommunications, applications in medical technology – in short, connectors are at work in virtually every conceivable application area. Thanks to the ongoing development of our technologies, our customers enjoy investment security and benefit from durable, long-term functionality.

Wherever our customers are, we're there.

Increasing industrialization is creating growing markets that are characterized by widely diverging demands and requirements. What these markets all share in common is the quest for perfection, increasingly efficient processes and reliable technologies. **HARTING** is providing these technologies – in Europe, the Americas and Asia. In order to implement customer requirements in the best possible manner, the **HARTING** professionals at our international subsidiaries engage in up-close, partnership-based interaction with our customers, right from the very early product development phase.

Our on-site staff form the interface to the centrally coordinated development and production departments. In this way, our customers can rely on consistently high, superior product quality – worldwide.

Our claim: Pushing Performance.

HARTING provides more than optimally attuned components. In order to offer our customers the best possible solutions, on request **HARTING** contributes a great deal more and is tightly integrated into the value-creation process.

From ready-assembled cables through to control racks or ready-to-go control desks. Our aim is to generate maximum benefit for our customers – with no compromises!

Quality creates reliability – and warrants trust.

The **HARTING** brand stands for superior quality and reliability – worldwide. The standards we set are the result of consistent, stringent quality management that is subject to regular certifications and audits.

EN ISO 9001, the EU Eco-Audit and ISO 14001:2004 are key elements here. We take a proactive stance towards new requirements, which is why **HARTING** is the first company worldwide to have obtained the new IRIS quality certificate for rail vehicles.

HARTING technology creates added value for customers.

Technologies by HARTING are at work worldwide. HARTING's presence stands for smoothly functioning systems powered by intelligent connectors, smart infrastructure solutions and sophisticated network systems. Over the course of many years of close, trust-based cooperation with its customers, the HARTING Technology Group has become one of the leading specialists globally for connector technology. We offer individual customers specific and innovative solutions that go beyond the basic standard functionalities. These tailored solutions deliver sustained results, ensure investment security and enable customers to achieve significant added value.

Opting for HARTING opens up an innovative, complex world of concepts and ideas.

In order to develop and produce connectivity and network solutions serving an exceptionally wide range of connector applications in a professional and cost-effective manner, HARTING not only commands the full array of conventional tools and basic technologies. Above and beyond these capabilities, HARTING is constantly harnessing and refining its broad base of knowledge and experience to create new solutions that also ensure continuity. To secure its lead in know-how, HARTING draws on a wealth of sources from its in-house research and applications.

Salient examples of these sources of innovative knowledge include microstructure technologies, 3D design and connection technology, high-temperature and ultrahigh-frequency applications that are finding use in telecommunications and automation networks, in the automotive industry, or in industrial sensor and actuator applications, RFID and wireless technologies, in addition to packaging and housing made of plastics, aluminum and stainless steel.

HARTING overcomes technological limitations.

Drawing on the comprehensive resources of the group's technology pool, HARTING devises practical solutions for its customers. Whether this involves industrial networks for manufacturing automation, or hybrid interface solutions for wireless telecommunication infrastructures, 3D circuit carriers with microstructures, or cable assemblies for high-temperature applications in the automotive industry – HARTING technologies offer not only components, but comprehensive solutions attuned to individual customer requirements and preferences. The range of cost-effective solutions covers ready-to-use cable configurations, completely assembled backplanes and board system carriers, as well as fully wired and tested control panels.

In order to ensure the future-proof design of RF and EMC-compatible interface solutions, the central HARTING laboratory (certified to EN 45001) employs simulation tools, as well as experimental, testing and diagnostics facilities all the way to scanning electron microscopes. In addition to product and process suitability considerations, lifecycle and environmental aspects play a key role in the selection of materials and processes.

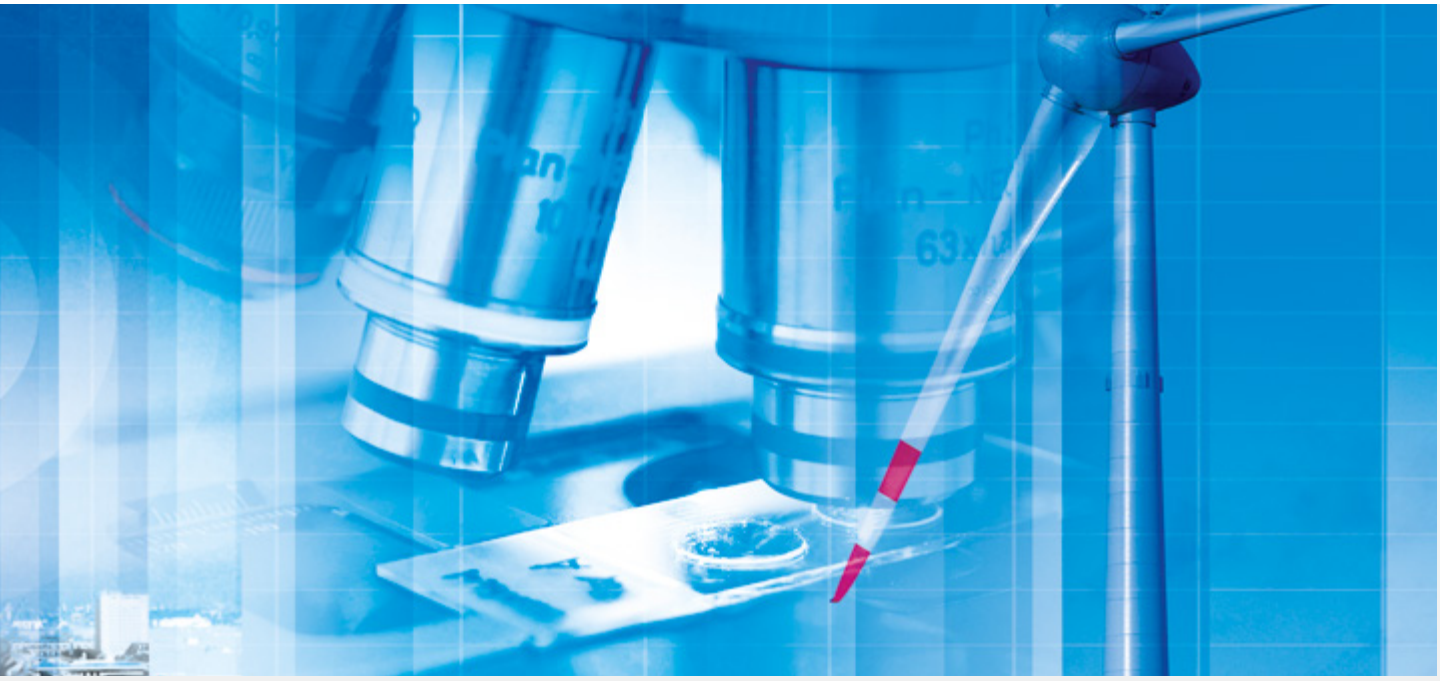

HARTING's knowledge is practical know-how that generates synergy effects.

HARTING commands decades of experience with regard to the applications conditions involved in connections in telecommunications, computer, network and medical technologies, as well as industrial automation technologies, e.g. in the mechanical engineering and plant engineering areas, in addition to the power generation industry and the transportation sector. **HARTING** is highly conversant with the specific application areas in all of these technology fields. In every solution approach, the key focus is on the application. In this context, uncompromising, superior quality is our hallmark. Every new solution found invariably flows back into the **HARTING** technology pool, thereby enriching our resources. And every new solution we go on to create will draw on this wealth of resources in order to optimize each and every individual solution. **HARTING** is synergy in action.

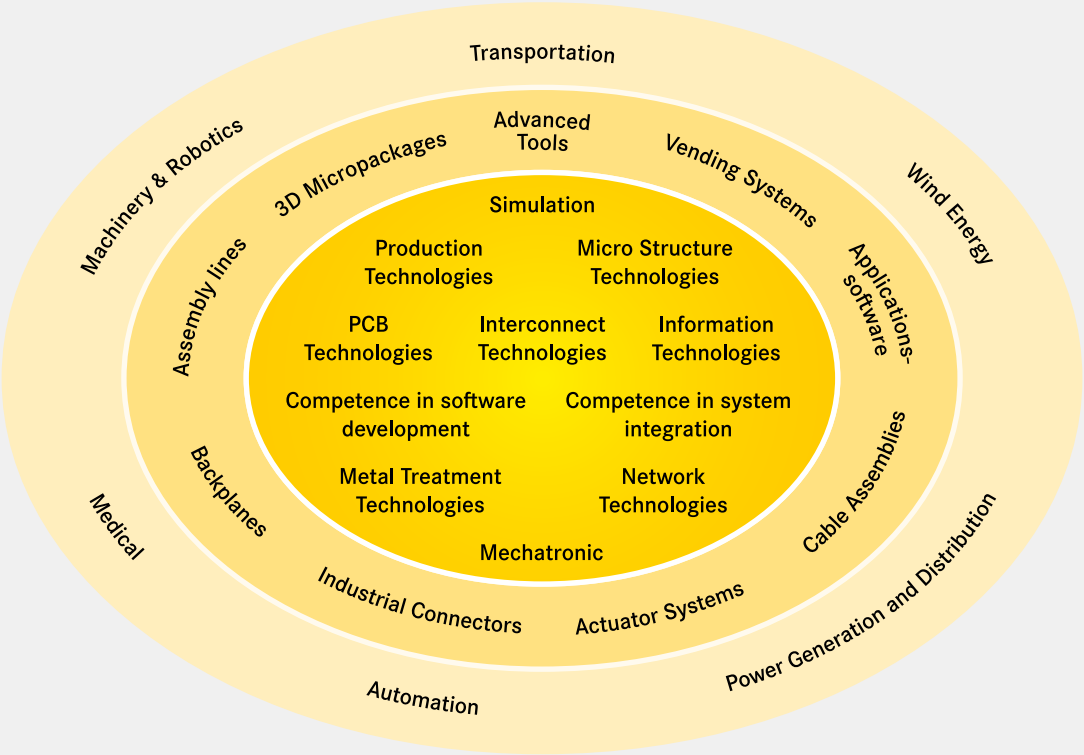

HARTING eCatalogue

The **HARTING eCatalogue / eShop** can be found on our homepage at **www.HARTING.com** or at the direct link **www.eCatalogue.HARTING.com**.

The HARTING e-Catalogue is your platform for conveniently selecting individual products as well as configuring complete solutions. Our comprehensive product pages provide you with all necessary technical information and CAD files in various formats for downloading. You may also contact our technical sales department directly.

Find out about **product innovations and news** on the start page of the HARTING e-Catalogue or go directly to **www.product-news.HARTING.com**.

Registered users can take advantage of MyHARTING to check on availability or prices, and to place or track their orders. Here, your customized „HARTING history“ provides you with a list of your inquiries, quotations and more.

Sign up now for your free e-Catalogue account at HARTING!

www.eShop.HARTING.com

Contents | Page

M8

Number of contacts

4

Reflow soldering termination (THR)
Shielded

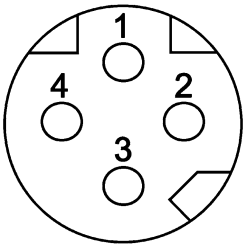

Technical characteristics

Number of contacts	4
Rated current	4 A
Rated voltage	60 V
Rated impulse voltage	1.5 kV
Pollution degree	3
Insulation resistance	>10^8 Ω
Contact resistance	≤10 mΩ
Mating cycles	≥100
Degree of protection acc. to IEC 60529	IP65 / IP67, when mated

Technical characteristics

Transmission characteristics	Cat. 5, Class D up to 100 MHz
Tightening torque	1 Nm Lock nut
Material (contacts)	Copper alloy
Surface (contacts)	Gold plated
RoHS	compliant with exemption

Specifications and approvals

IEC 61076-2-114

Identification	Part number Female	Drawing (dimensions in mm)
Circular connectors M8, PCB connector, Straight, Reflow soldering termination (THR), Shielded, Pack contents: 50 pieces in a tray  Order housings separately	21 02 381 2418	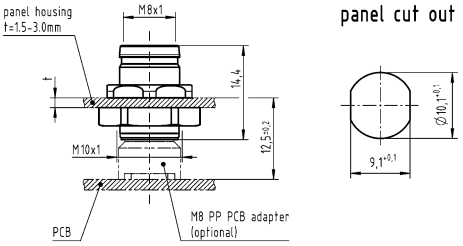
Circular connectors M8, PCB connector, Straight, Reflow soldering termination (THR), Shielded, Pack contents: 25 pieces in a carton box  Order housings separately	21 02 381 2419	

Identification	Part number Female	Drawing (dimensions in mm)
Circular connectors M8, Housing, for front mounting, Pack contents: incl. lock nut 	21 02 301 2001	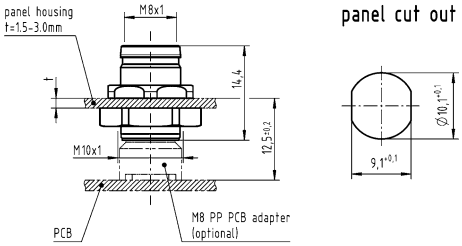
Circular connectors M8, Housing, for front mounting, Pack contents: without lock nut	21 02 301 2002	
Lock nut, M10 x 1	21 01 000 0051	

M8

Number of contacts

4

Reflow soldering termination (THR)
Shielded

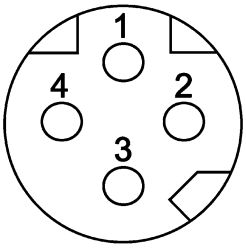

Technical characteristics

Number of contacts	4
Rated current	4 A
Rated voltage	60 V
Rated impulse voltage	1.5 kV
Pollution degree	3
Insulation resistance	>10^8 Ω
Contact resistance	≤10 mΩ
Degree of protection acc. to IEC 60529	IP65 / IP67, when mated
Transmission characteristics	Cat. 5, Class D up to 100 MHz

Technical characteristics

Tightening torque	1 Nm Lock nut
Material (contacts)	Copper alloy
Surface (contacts)	Gold plated
RoHS	compliant with exemption

Specifications and approvals

IEC 61076-2-114

Identification	Part number Female	Drawing (dimensions in mm)
Circular connectors M8, PCB connector, Straight, for front mounting, Reflow soldering termination (THR), Shielded, Pack contents: incl. housing 	21 02 381 2431	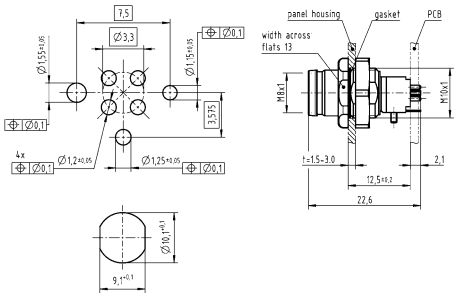 Panel cut out

Number of contacts

4

Wave soldering termination
Shielded

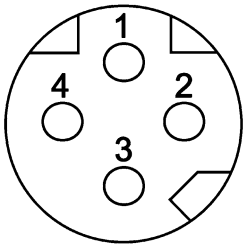

Technical characteristics

Number of contacts	4
Rated current	4 A
Rated voltage	60 V
Rated impulse voltage	1.5 kV
Pollution degree	3
Insulation resistance	>10^8 Ω
Contact resistance	≤10 mΩ
Mating cycles	≥100
Degree of protection acc. to IEC 60529	IP67, when mated
Transmission characteristics	Cat. 5, Class D up to 100 MHz
Tightening torque	1 Nm Lock nut

Technical characteristics

Material (contacts)	Copper alloy
Surface (contacts)	Gold plated
RoHS	compliant with exemption

Specifications and approvals

IEC 61076-2-114

Identification	Part number Female	Drawing (dimensions in mm)
Circular connectors M8, PCB connector, Straight, Wave soldering termination, Shielded  Order housings separately	21 42 000 0006	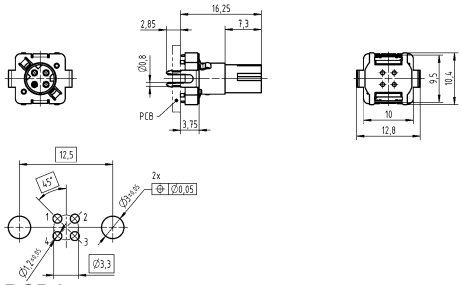 PCB layout
Circular connectors M8, Housing, for front mounting, 9 mm 	21 41 000 0016	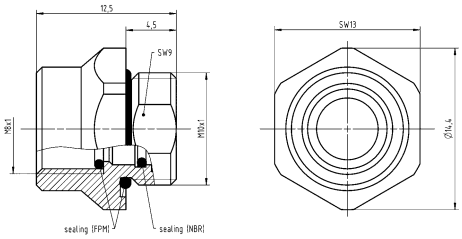
Circular connectors M8, Housing, for front mounting, 13 mm 	21 41 000 0017	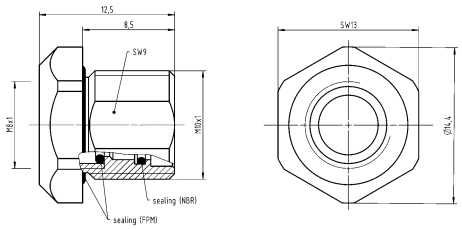

M8

Identification	Part number Female	Drawing (dimensions in mm)
Circular connectors M8, hexagonal nut, M10 x 1 	21 41 000 0018	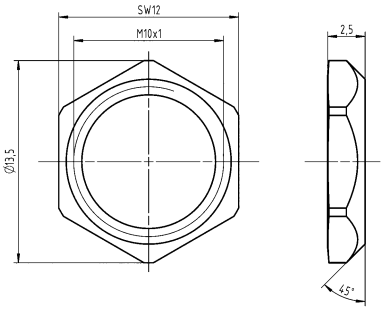

Number of contacts

4

Wave soldering termination
Shielded

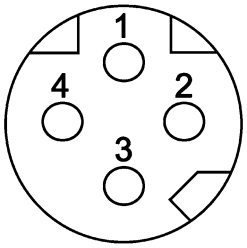

Technical characteristics

Number of contacts	4
Rated current	4 A
Rated voltage	60 V
Rated impulse voltage	1.5 kV
Pollution degree	3
Insulation resistance	>10^8 Ω
Contact resistance	≤10 mΩ
Mating cycles	≥100
Degree of protection acc. to IEC 60529	IP67, when mated

Technical characteristics

Transmission characteristics	Cat. 5, Class D up to 100 MHz
Tightening torque	1 Nm Lock nut
Material (contacts)	Copper alloy
Surface (contacts)	Gold plated
RoHS	compliant with exemption

Specifications and approvals

IEC 61076-2-114

Identification		Part number Female	Drawing (dimensions in mm)
Circular connectors M8, PCB connector, Angled, Wave soldering termination, Shielded Order housings separately		21 42 010 0003 401	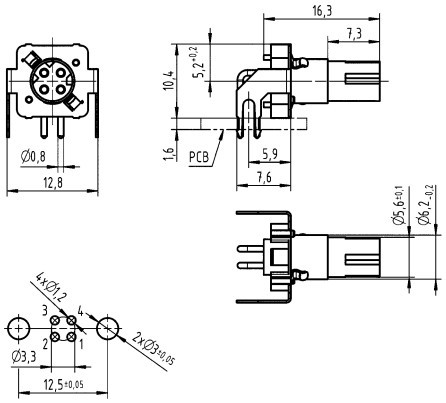 PCB layout
Circular connectors M8, Housing, for rear mounting, 7 mm		21 42 010 0004 401	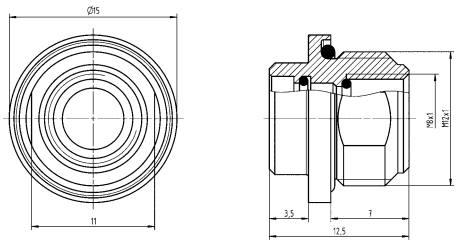

M8

Identification	Part number Female	Drawing (dimensions in mm)
Circular connectors M8, Housing, for rear mounting, 11 mm 	21 42 010 0002 401	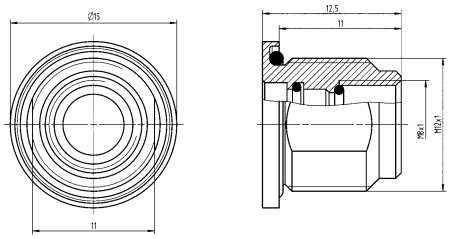
Circular connectors M8, hexagonal nut, M12 x 1 	21 42 010 0001 401	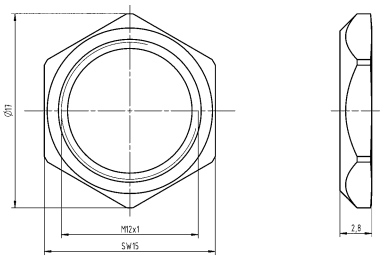

Number of contacts

4

Wave soldering termination
Shielded

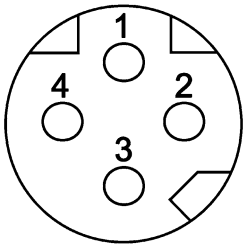

Technical characteristics

Number of contacts	4
Rated current	4 A
Rated voltage	60 V
Rated impulse voltage	1.5 kV
Pollution degree	3
Insulation resistance	>10^8 Ω
Contact resistance	≤10 mΩ
Mating cycles	≥100
Degree of protection acc. to IEC 60529	IP67

Technical characteristics

Transmission characteristics	Cat. 5, Class D up to 100 MHz
Tightening torque	1 Nm Lock nut
Material (contacts)	Copper alloy
Surface (contacts)	Gold plated
RoHS	compliant with exemption

Specifications and approvals

IEC 61076-2-114

Identification	Part number Female	Drawing (dimensions in mm)
Circular connectors M8, 9 mm, PCB connector, Straight, for front mounting, Wave soldering termination, Shielded 	21 42 000 0014	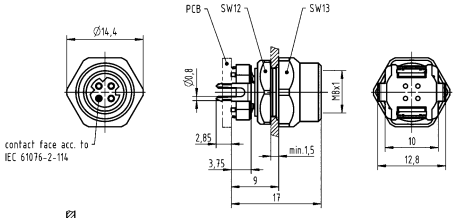 Panel cut out 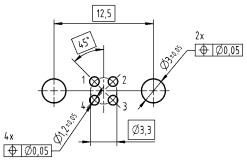 PCB layout

M8

Identification	Part number Female	Drawing (dimensions in mm)
Circular connectors M8, 13 mm, PCB connector, Straight, for front mounting, Wave soldering termination, Shielded 	21 42 000 0005	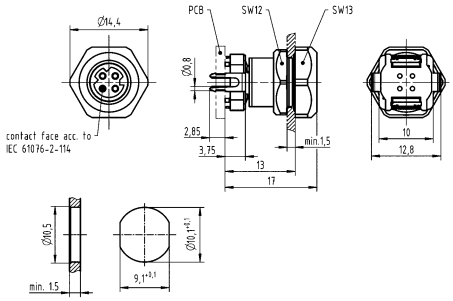 Panel cut out 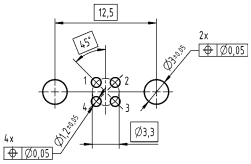 PCB layout
Circular connectors M8, 7 mm, PCB connector, Angled, for rear mounting, Wave soldering termination, Shielded 	21 42 000 0020	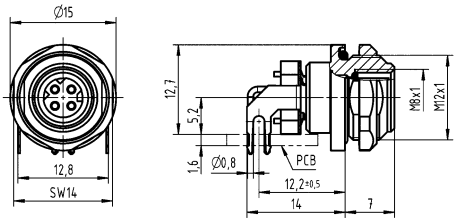 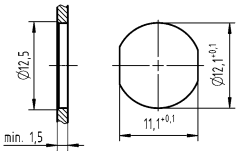 Panel cut out 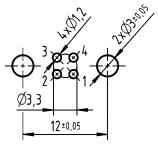 PCB layout

Identification	Part number Female	Drawing (dimensions in mm)
Circular connectors M8, 11 mm, PCB connector, Angled, for rear mounting, Wave soldering termination, Shielded 	21 42 000 0019	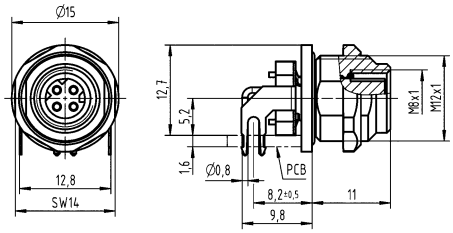 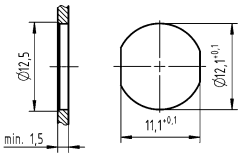 Panel cut out 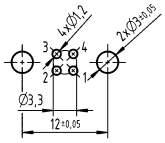 PCB layout

M8

Number of contacts

4

Reflow soldering termination (THR)
Shielded

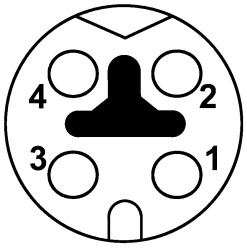

Technical characteristics

Number of contacts	4
Rated current	4 A
Rated voltage	60 V
Rated impulse voltage	1.5 kV
Pollution degree	3
Insulation resistance	>10^8 Ω
Contact resistance	≤10 mΩ
Mating cycles	≥100
Degree of protection acc. to IEC 60529	IP65 / IP67, when mated

Technical characteristics

Transmission characteristics	Cat. 5, Class D up to 100 MHz
Tightening torque	1 Nm Lock nut
Material (contacts)	Copper alloy
Surface (contacts)	Gold plated
RoHS	compliant with exemption

Specifications and approvals

IEC 61076-2-114

Identification	Part number Female	Drawing (dimensions in mm)
Circular connectors M8, PCB connector, Reflow soldering termination (THR), Shielded, Pack contents: 50 pieces in a tray  Order housings separately	21 02 341 2418	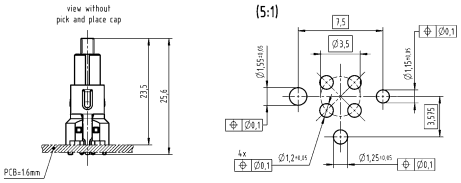
Circular connectors M8, PCB connector, Straight, Reflow soldering termination (THR), Shielded, Pack contents: 25 pieces in a carton box  Order housings separately	21 02 341 2419	
Circular connectors M8, Housing, for front mounting, Pack contents: incl. lock nut 	21 02 301 2001	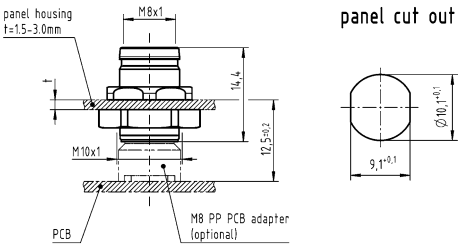

Identification	Part number Female	Drawing (dimensions in mm)
Circular connectors M8, Housing, for front mounting, Pack contents: without lock nut	21 02 301 2002	
Lock nut, M10 x 1	21 01 000 0051	

M8

Number of contacts

4

Reflow soldering termination (THR)
Shielded

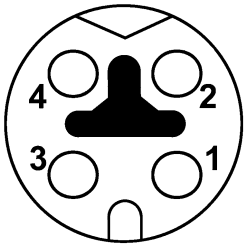

Technical characteristics

Number of contacts	4
Rated current	4 A
Rated voltage	60 V
Rated impulse voltage	1.5 kV
Pollution degree	3
Insulation resistance	>10^8 Ω
Contact resistance	≤10 mΩ
Degree of protection acc. to IEC 60529	IP65 / IP67, when mated
Transmission characteristics	Cat. 5, Class D up to 100 MHz

Technical characteristics

Tightening torque	1 Nm Lock nut
Material (contacts)	Copper alloy
Surface (contacts)	Gold plated
RoHS	compliant with exemption

Specifications and approvals

IEC 61076-2-114

Identification	Part number Female	Drawing (dimensions in mm)
Circular connectors M8, PCB connector, Straight, for front mounting, Reflow soldering termination (THR), Shielded, Pack contents: incl. housing 	21 02 341 2431	

Panel feed through

A-coding

Number of contacts

3

Unshielded

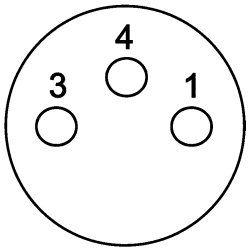

M8

Technical characteristics

Number of contacts	3
Rated current	3 A
Rated voltage	50 V
Rated impulse voltage	1.5 kV
Pollution degree	3
Insulation resistance	>10^8 Ω
Contact resistance	≤10 mΩ
Mating cycles	≥100
Locking type	Screw locking
Conductor length	50 cm
Degree of protection acc. to IEC 60529	IP67
Conductor cross-section	0.25 mm²
Conductor cross-section	AWG 24
Tightening torque	0.8 Nm Lock nut

Technical characteristics

Material (insert)	Thermoplastic polyurethane (TPU)
Material (hood/housing)	Copper-zinc alloy
Material (contacts)	Brass
Surface (contacts)	Gold plated
RoHS	compliant with exemption, compliant

Specifications and approvals

IEC 61076-2-104

CE

Identification	Conductor cross-section (mm²)	Part number Female	Drawing (dimensions in mm)
Circular connectors M8, Panel feed through, With conductors, for front mounting, Unshielded 	0.25	21 02 357 6305	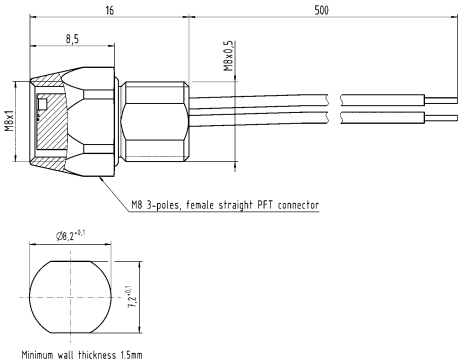 Panel cut out
Circular connectors M8, hexagonal nut, M8 x 0.5 		21 01 000 0048	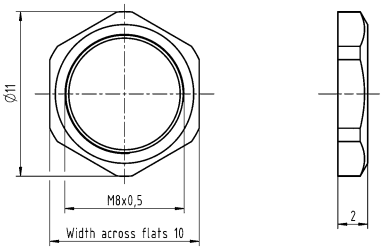

M8

Number of contacts

4

Unshielded

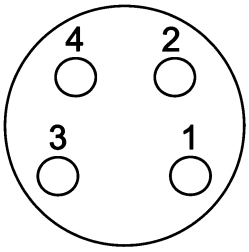

Technical characteristics

Number of contacts	4
Rated current	3 A
Rated voltage	50 V
Rated impulse voltage	1.5 kV
Pollution degree	3
Insulation resistance	>10^8 Ω
Contact resistance	≤10 mΩ
Mating cycles	≥100
Locking type	Screw locking
Conductor length	50 cm
Degree of protection acc. to IEC 60529	IP67
Conductor cross-section	0.25 mm²
Conductor cross-section	AWG 24
Tightening torque	0.8 Nm Lock nut

Technical characteristics

Material (insert)	Thermoplastic polyurethane (TPU)
Material (hood/housing)	Copper-zinc alloy
Material (contacts)	Brass
Surface (contacts)	Gold plated
RoHS	compliant with exemption, compliant

Specifications and approvals

IEC 61076-2-104

CE

Identification	Conductor cross-section (mm²)	Part number Female	Drawing (dimensions in mm)
Circular connectors M8, Panel feed through, With conductors, for front mounting, Unshielded 	0.25	21 02 357 6405	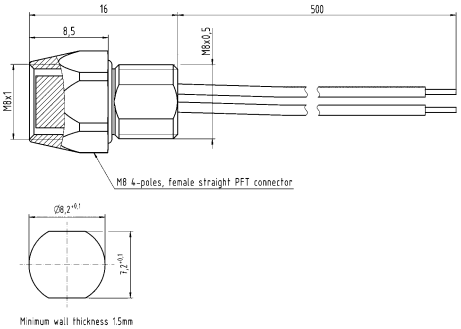 Panel cut out
Circular connectors M8, hexagonal nut, M8 x 0.5 		21 01 000 0048	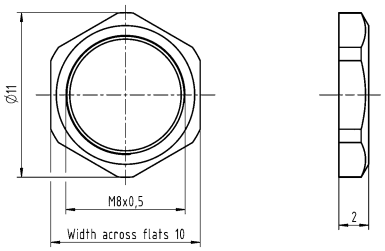

Technical characteristics

Material (accessories)	Thermoplastic

Technical characteristics

Colour (accessories)	Black
RoHS	compliant

Identification	Part number	Drawing (dimensions in mm)
Circular connectors M8, Cap, for male inserts, with cord 	21 41 000 0003	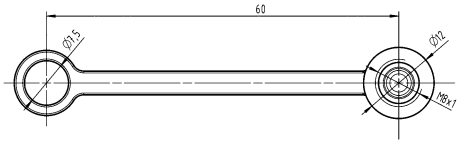
Circular connectors M8, Cap, for female inserts, with cord 	21 41 000 0004	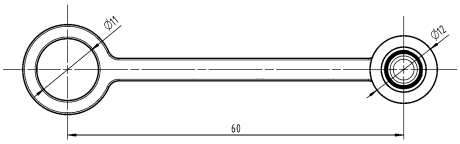

Contents | Page

M12

Number of contacts

4

Reflow soldering termination (THR)
Shielded

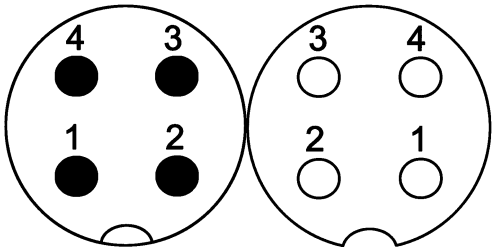

Technical characteristics

Number of contacts	4
Rated current	4 A
Rated voltage	250 V
Rated impulse voltage	1.5 kV
Pollution degree	3
Insulation resistance	>10^8 Ω
Contact resistance	≤10 mΩ
Mating cycles	≥100
Locking type	Screw locking, PushPull
Degree of protection acc. to IEC 60529	IP65 / IP67, when mated
Tightening torque	2 Nm Lock nut

Technical characteristics

Material (insert)	Liquid crystal polymer (LCP)
Material (contacts)	Copper alloy
Surface (contacts)	Gold plated
RoHS	compliant with exemption, compliant

Specifications and approvals

IEC 61076-2-101
UL 1977 ECBT2.E102079
CSA-C22.2 No. 182.3 ECBT8.E102079

Identification	Part number Male	Part number Female	Drawing (dimensions in mm)
Circular connectors M12, PCB adapter, Straight, Reflow soldering termination (THR), Shielded, Pack contents: 60 pieces in a tray  Order housings separately	21 03 321 1418	21 03 321 2418	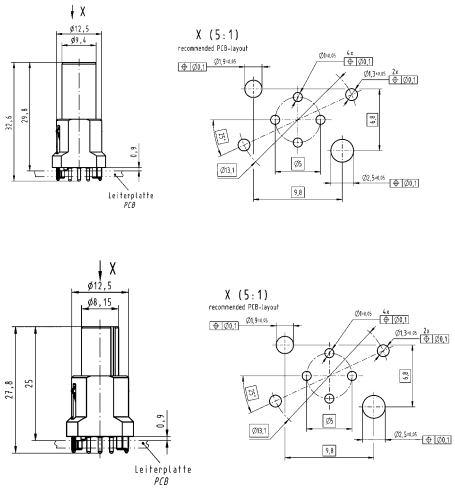

Identification	Part number Male	Part number Female	Drawing (dimensions in mm)
Circular connectors M12, Housing, for rear mounting, Pack contents: 10 pieces 	21 03 301 1000	21 03 301 2000	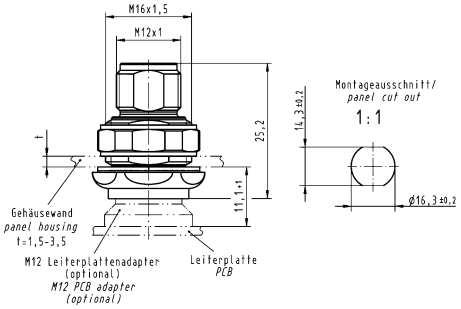 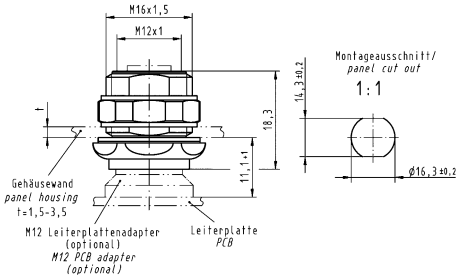
Circular connectors M12, PushPull, Housing, for front mounting, Pack contents: 10 pieces 	21 03 301 1003	21 03 301 2003	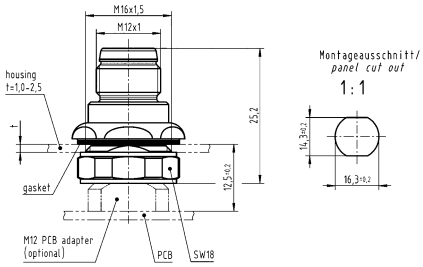 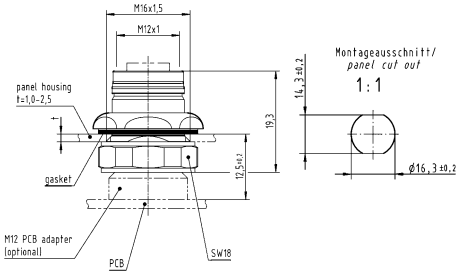

M12

Number of contacts

4

Reflow soldering termination (THR)
Shielded

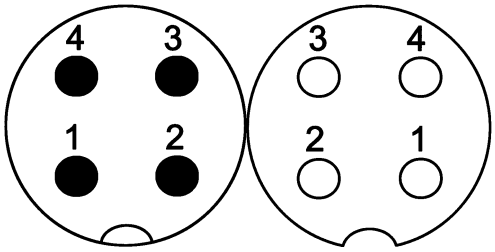

Technical characteristics

Number of contacts	4
Rated current	4 A
Rated voltage	250 V
Rated impulse voltage	1.5 kV
Pollution degree	3
Insulation resistance	>10^8 Ω
Contact resistance	≤10 mΩ
Mating cycles	≥100
Locking type	Screw locking, PushPull
Degree of protection acc. to IEC 60529	IP65 / IP67, when mated
Tightening torque	2 Nm Lock nut

Technical characteristics

Material (insert)	Liquid crystal polymer (LCP)
Material (hood/housing)	Zinc die-cast
Material (contacts)	Copper alloy
Surface (contacts)	Gold plated
RoHS	compliant with exemption

Specifications and approvals

IEC 61076-2-101
UL 1977 ECBT2.E102079
CSA-C22.2 No. 182.3 ECBT8.E102079

Identification	Part number Male	Part number Female	Drawing (dimensions in mm)
Circular connectors M12, PCB adapter, Straight, incl. housing, for rear mounting, Reflow soldering termination (THR), Shielded 	21 03 321 1430	21 03 321 2430	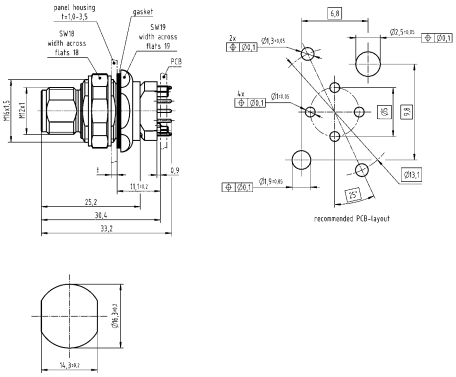 Panel cut out 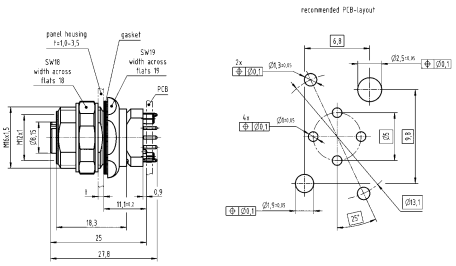 Panel cut out

Identification	Part number Male	Part number Female	Drawing (dimensions in mm)
Circular connectors M12, PushPull, PCB adapter, Straight, incl. housing, for front mounting, Reflow soldering termination (THR), Shielded 	21 03 321 1431	21 03 321 2431	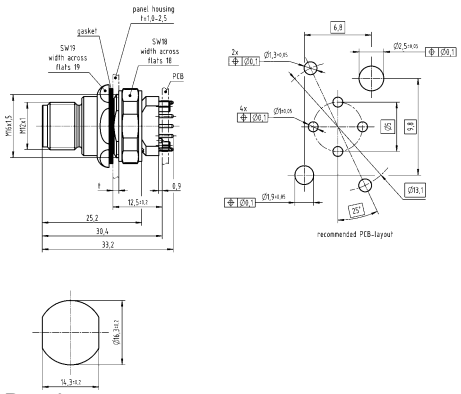 Panel cut out 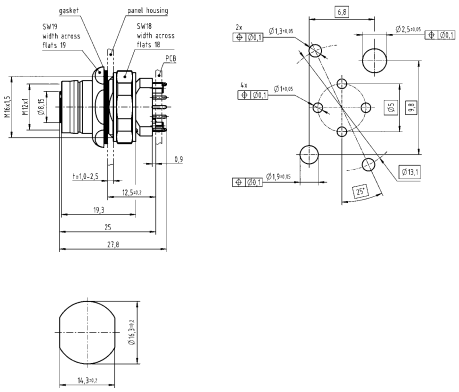 Panel cut out

M12

Number of contacts

4

Reflow soldering termination (THR)
Shielded

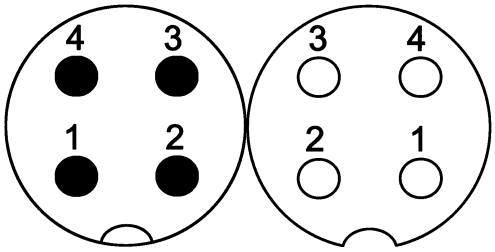

Technical characteristics

Number of contacts	4
Rated current	4 A
Rated voltage	250 V
Rated impulse voltage	1.5 kV
Pollution degree	3
Insulation resistance	>10^8 Ω
Contact resistance	≤10 mΩ
Mating cycles	≥100
Locking type	Screw locking
Degree of protection acc. to IEC 60529	IP20, IP67, when mated

Technical characteristics

Tightening torque	2 Nm Lock nut
Material (insert)	Polyamide (PA)
Material (hood/housing)	Zinc die-cast
Material (contacts)	Copper alloy
Surface (contacts)	Gold plated
RoHS	compliant with exemption

Specifications and approvals

IEC 61076-2-101

Identification	Part number Male	Part number Female	Drawing (dimensions in mm)
Circular connectors M12, PCB adapter, Straight, for rear mounting, Reflow soldering termination (THR), Shielded, IP20 	21 03 321 1410	21 03 321 6410	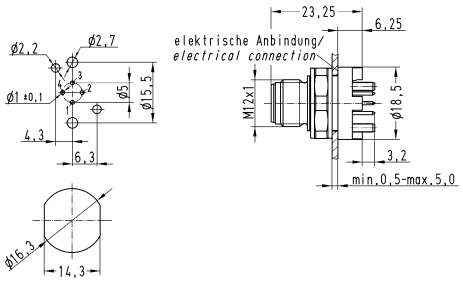 Panel cut out 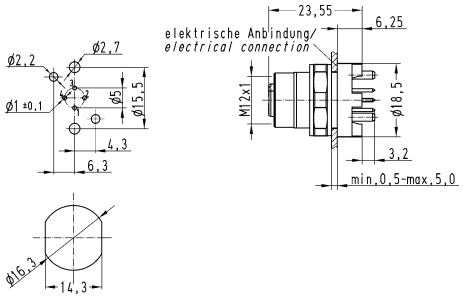 Panel cut out

Identification	Part number Male	Part number Female	Drawing (dimensions in mm)
Circular connectors M12, PCB adapter, Straight, for rear mounting, Reflow soldering termination (THR), Shielded, IP67 	21 03 321 1420	21 03 321 6420	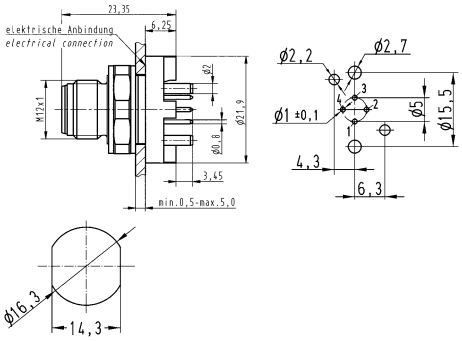 Panel cut out 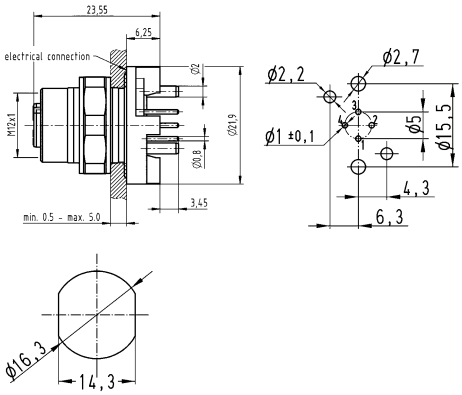 Panel cut out

M12

Number of contacts

4

Reflow soldering termination (SMT)
Unshielded

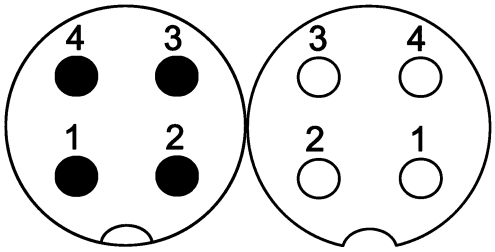

Technical characteristics

Number of contacts	4
Rated current	4 A
Rated voltage	250 V
Pollution degree	3
Insulation resistance	>10^8 Ω
Contact resistance	≤10 mΩ
Mating cycles	≥100
Locking type	Screw locking
Degree of protection acc. to IEC 60529	IP67, when mated

Technical characteristics

Tightening torque	1 Nm Lock nut
Material (insert)	Liquid crystal polymer (LCP)
Material (contacts)	Copper alloy
Surface (contacts)	Gold plated
RoHS	compliant with exemption

Specifications and approvals

IEC 61076-2-101

Identification	Part number Male	Part number Female	Drawing (dimensions in mm)
Circular connectors M12, PCB adapter, Straight, Reflow soldering termination (SMT), Unshielded  Order housings separately	21 03 311 1415	21 03 311 2410	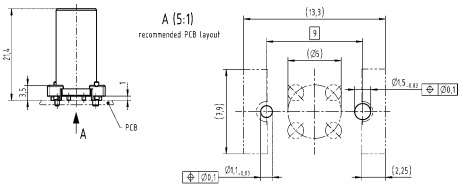 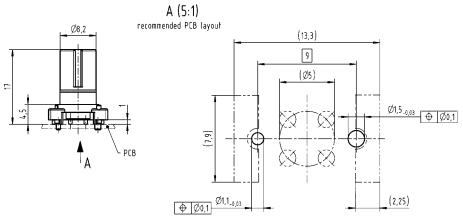
Circular connectors M12, PCB adapter, Straight, Reflow soldering termination (SMT), Unshielded, Pack contents: 75 pieces on reel  Order housings separately	21 03 311 1416	21 03 311 2411	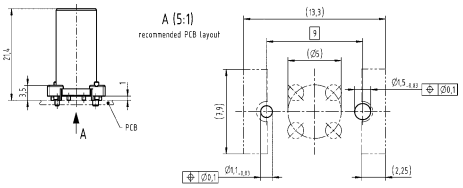 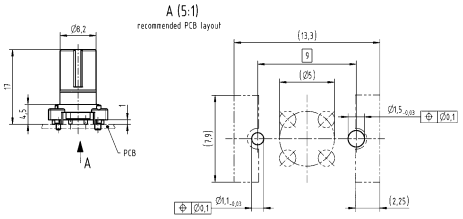

Identification	Part number Male	Part number Female	Drawing (dimensions in mm)
Circular connectors M12, Housing, for front mounting, M14 x 1, 9 mm  If necessary, order lock nut 21 41 000 0011 separately.	21 41 000 0012	21 41 000 0010	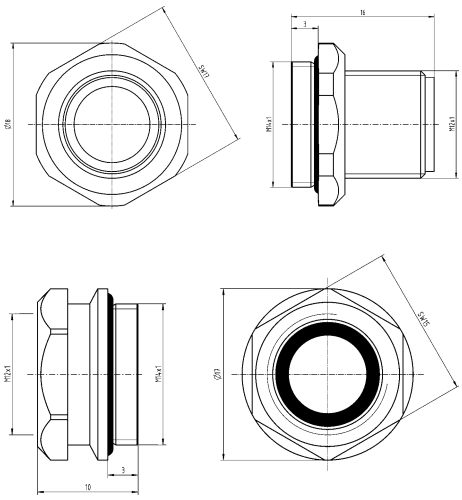
Circular connectors M12, Housing, for front mounting, M14 x 1, 13 mm  If necessary, order lock nut 21 41 000 0011 separately.		21 41 000 0013	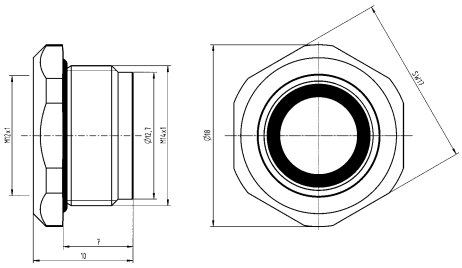

M12

Number of contacts

4

Wave soldering termination
Shielded

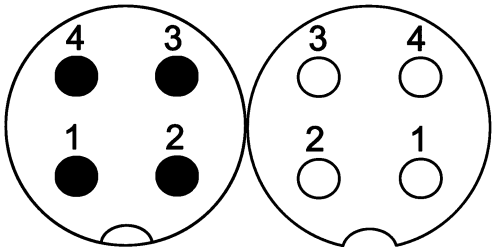

Technical characteristics

Number of contacts	4
Rated current	4 A
Rated voltage	250 V
Pollution degree	3
Insulation resistance	>10^8 Ω
Mating cycles	≥100
Locking type	Screw locking
Degree of protection acc. to IEC 60529	IP67, when screwed
Tightening torque	1 Nm Lock nut

Technical characteristics

Material (insert)	Polyamide (PA)
Material (hood/housing)	Copper-zinc alloy
Material (contacts)	Copper alloy
Surface (contacts)	Gold plated
RoHS	compliant with exemption

Specifications and approvals

IEC 61076-2-101

Identification	Part number Male	Part number Female	Drawing (dimensions in mm)
Circular connectors M12, PCB adapter, Angled, for rear mounting, Wave soldering termination, Shielded 	21 03 321 3401	21 03 321 4401	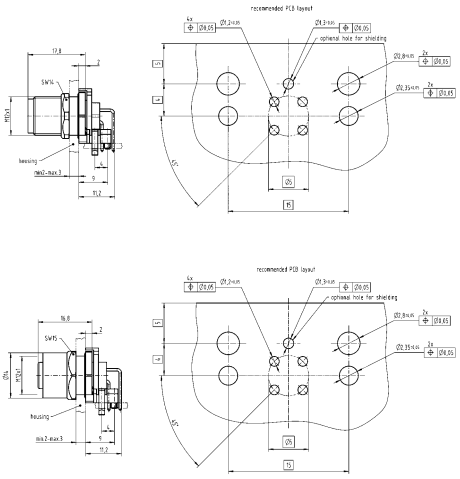

Number of contacts

5

Reflow soldering termination (THR)
Shielded

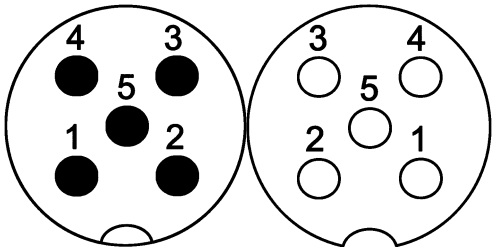

Technical characteristics

Number of contacts	5
Rated current	4 A
Rated voltage	60 V
Rated impulse voltage	1.5 kV
Pollution degree	3
Insulation resistance	>10^8 Ω
Contact resistance	≤10 mΩ
Mating cycles	≥100
Locking type	Screw locking, PushPull
Degree of protection acc. to IEC 60529	IP65 / IP67, when mated
Tightening torque	2 Nm Lock nut

Technical characteristics

Material (insert)	Liquid crystal polymer (LCP)
Material (contacts)	Copper alloy
Surface (contacts)	Gold plated
RoHS	compliant with exemption, compliant

Specifications and approvals

IEC 61076-2-101
UL 1977 ECBT2.E102079
CSA-C22.2 No. 182.3 ECBT8.E102079

Identification	Part number Male	Part number Female	Drawing (dimensions in mm)
Circular connectors M12, PCB adapter, Straight, Reflow soldering termination (THR), Shielded, Pack contents: 60 pieces in a tray  Order housings separately	21 03 321 1518	21 03 321 2518	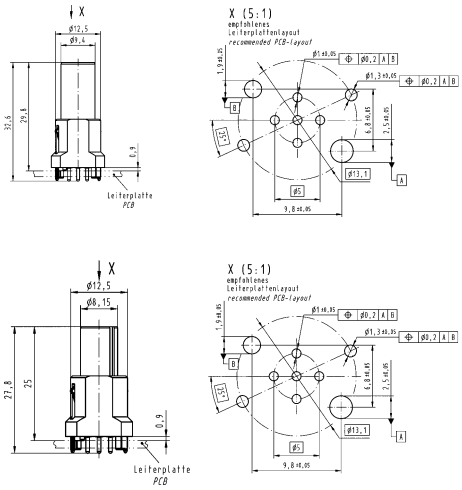

M12

Identification	Part number Male	Part number Female	Drawing (dimensions in mm)
Circular connectors M12, Housing, for rear mounting, Pack contents: 10 pieces 	21 03 301 1000	21 03 301 2000	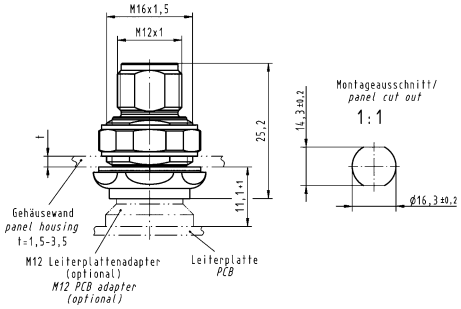 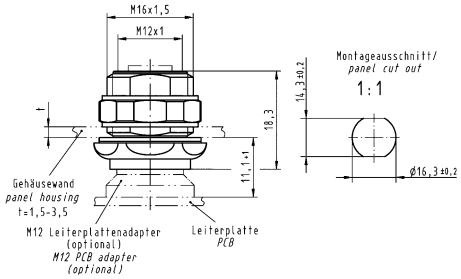
Circular connectors M12, PushPull, Housing, for front mounting, Pack contents: 10 pieces 	21 03 301 1003	21 03 301 2003	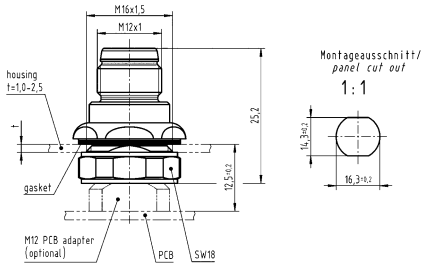 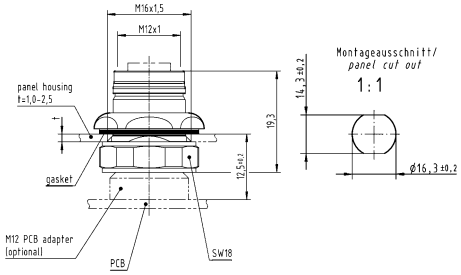

Number of contacts

5

Reflow soldering termination (THR)
Shielded

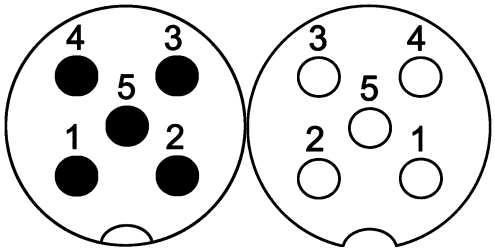

Technical characteristics

Number of contacts	5
Rated current	4 A
Rated voltage	60 V
Rated impulse voltage	1.5 kV
Pollution degree	3
Insulation resistance	>10^8 Ω
Contact resistance	≤10 mΩ
Mating cycles	≥100
Locking type	Screw locking, PushPull
Degree of protection acc. to IEC 60529	IP65 / IP67, when mated
Tightening torque	2 Nm Lock nut

Technical characteristics

Material (insert)	Liquid crystal polymer (LCP)
Material (hood/housing)	Zinc die-cast
Material (contacts)	Copper alloy
Surface (contacts)	Gold plated
RoHS	compliant with exemption

Specifications and approvals

IEC 61076-2-101
UL 1977 ECBT2.E102079
CSA-C22.2 No. 182.3 ECBT8.E102079

Identification	Part number Male	Part number Female	Drawing (dimensions in mm)
Circular connectors M12, PCB adapter, Straight, incl. housing, for rear mounting, Reflow soldering termination (THR), Shielded 	21 03 321 1530	21 03 321 2530	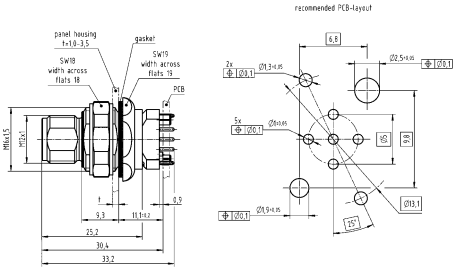 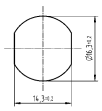 Panel cut out 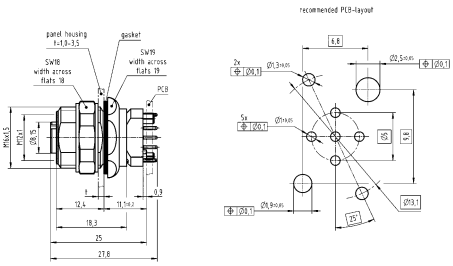 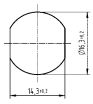 Panel cut out

M12

Identification	Part number Male	Part number Female	Drawing (dimensions in mm)
Circular connectors M12, PushPull, PCB adapter, Straight, incl. housing, for front mounting, Reflow soldering termination (THR), Shielded 	21 03 321 1531	21 03 321 2531	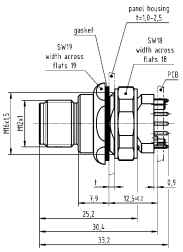 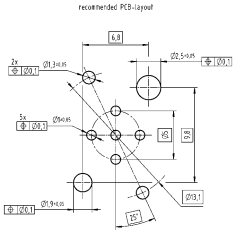 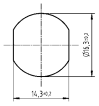 Panel cut out 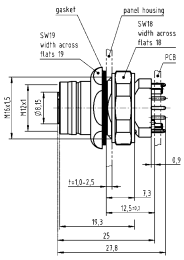 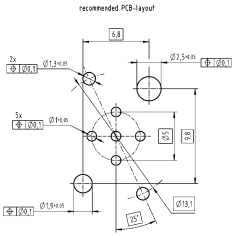 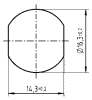 Panel cut out

Number of contacts

5

Reflow soldering termination (THR)
Shielded

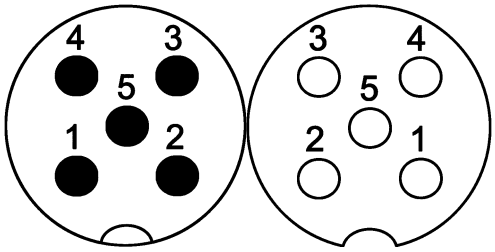

Technical characteristics

Number of contacts	5
Rated current	4 A
Rated voltage	60 V
Rated impulse voltage	1.5 kV
Pollution degree	3
Insulation resistance	>10^8 Ω
Contact resistance	≤10 mΩ
Mating cycles	≥100
Locking type	Screw locking
Degree of protection acc. to IEC 60529	IP20, IP67, when mated

Technical characteristics

Tightening torque	2 Nm Lock nut
Material (insert)	Polyamide (PA)
Material (hood/housing)	Zinc die-cast
Material (contacts)	Copper alloy
Surface (contacts)	Gold plated
RoHS	compliant with exemption

Specifications and approvals

IEC 61076-2-101

Identification	Part number Male	Part number Female	Drawing (dimensions in mm)
Circular connectors M12, PCB adapter, Straight, for rear mounting, Reflow soldering termination (THR), Shielded, IP20 	21 03 321 1510	21 03 321 6510	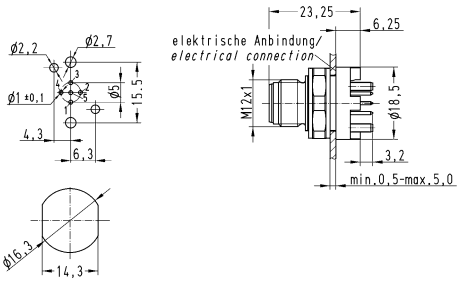 Panel cut out 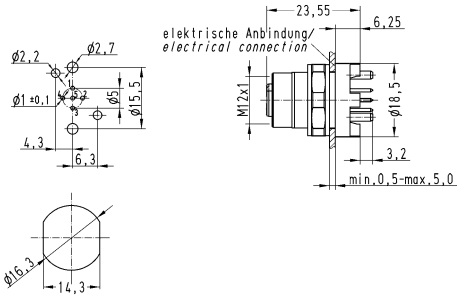 Panel cut out

	Identification	Part number Male	Part number Female	Drawing (dimensions in mm)
M12	Circular connectors M12, PCB adapter, Straight, for rear mounting, Reflow soldering termination (THR), Shielded, IP67 	21 03 321 1520	21 03 321 6520	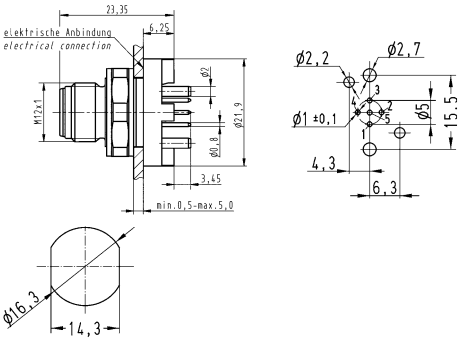 Panel cut out 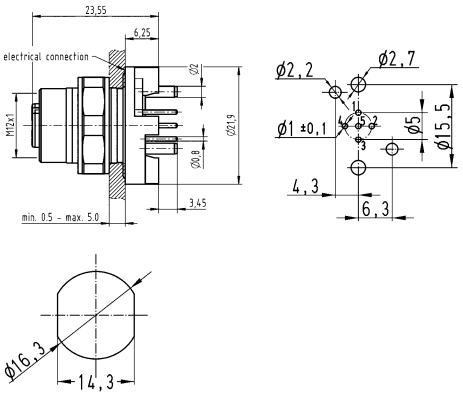 Panel cut out

Number of contacts

5

Reflow soldering termination (SMT)
Unshielded

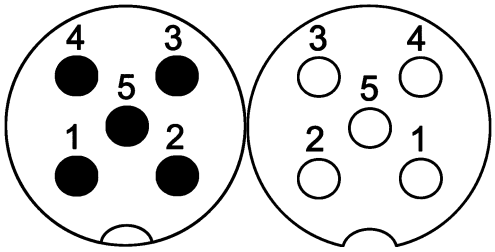

Technical characteristics

Number of contacts	5
Rated current	4 A
Rated voltage	60 V
Pollution degree	3
Insulation resistance	>10^8 Ω
Contact resistance	≤10 mΩ
Mating cycles	≥100
Locking type	Screw locking
Degree of protection acc. to IEC 60529	IP67, when mated

Technical characteristics

Tightening torque	1 Nm Lock nut
Material (insert)	Liquid crystal polymer (LCP)
Material (contacts)	Copper alloy
Surface (contacts)	Gold plated
RoHS	compliant with exemption

Specifications and approvals

IEC 61076-2-101

Identification	Part number Male	Part number Female	Drawing (dimensions in mm)
Circular connectors M12, PCB adapter, Straight, Reflow soldering termination (SMT), Unshielded  Order housings separately	21 03 311 1515	21 03 311 2510	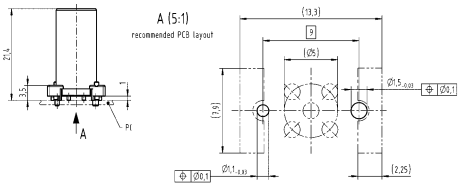 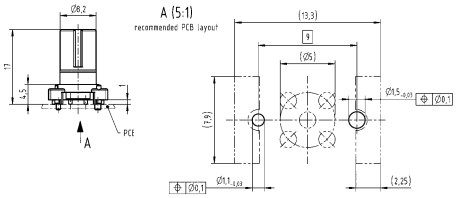
Circular connectors M12, PCB adapter, Straight, Reflow soldering termination (SMT), Unshielded, Pack contents: 75 pieces on reel  Order housings separately	21 03 311 1516	21 03 311 2511	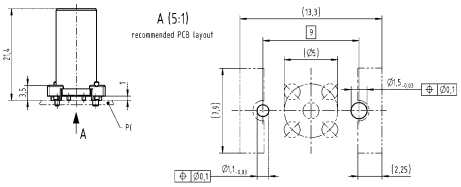 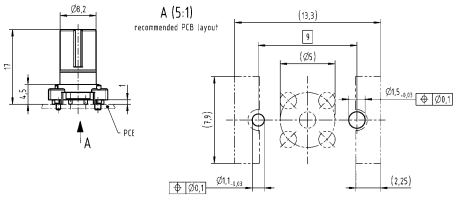

M12

Identification	Part number Male	Part number Female	Drawing (dimensions in mm)
Circular connectors M12, Housing, for front mounting, M14 x 1, 9 mm  If necessary, order lock nut 21 41 000 0011 separately.	21 41 000 0012	21 41 000 0010	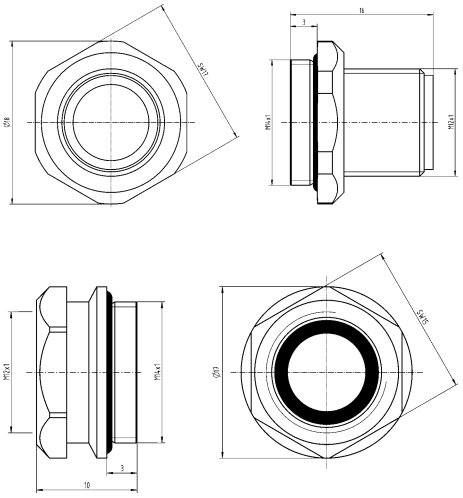
Circular connectors M12, Housing, for front mounting, M14 x 1, 13 mm  If necessary, order lock nut 21 41 000 0011 separately.		21 41 000 0013	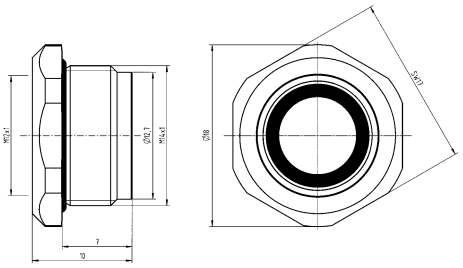

Number of contacts

5

Wave soldering termination
Shielded

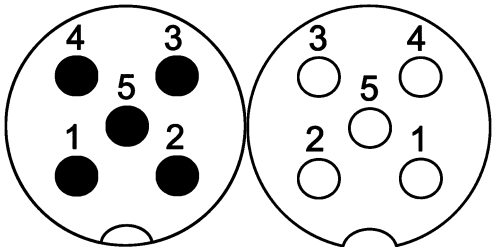

Technical characteristics

Number of contacts	5
Rated current	4 A
Rated voltage	60 V
Pollution degree	3
Insulation resistance	>10^8 Ω
Mating cycles	≥100
Locking type	Screw locking
Degree of protection acc. to IEC 60529	IP67, when mated
Tightening torque	1 Nm Lock nut

Technical characteristics

Material (insert)	Polyamide (PA)
Material (hood/housing)	Copper-zinc alloy
Material (contacts)	Copper alloy
Surface (contacts)	Gold plated
RoHS	compliant with exemption

Specifications and approvals

IEC 61076-2-101

Identification	Part number Male	Part number Female	Drawing (dimensions in mm)
Circular connectors M12, PCB adapter, Angled, for rear mounting, Wave soldering termination, Shielded 	21 03 321 3501	21 03 321 4501	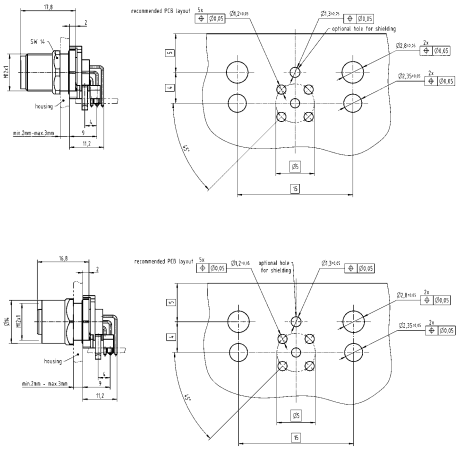

M12

Number of contacts

8

Reflow soldering termination (THR)
Shielded

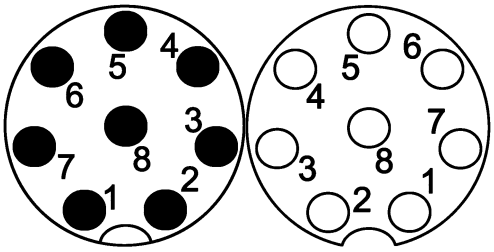

Technical characteristics

Number of contacts	8
Rated current	2 A
Rated voltage	30 V
Rated impulse voltage	1.5 kV
Pollution degree	3
Insulation resistance	>10^8 Ω
Contact resistance	≤10 mΩ
Mating cycles	≥100
Locking type	Screw locking, PushPull
Degree of protection acc. to IEC 60529	IP65 / IP67, when mated
Tightening torque	2 Nm Lock nut

Technical characteristics

Material (insert)	Liquid crystal polymer (LCP)
Material (contacts)	Copper alloy
Surface (contacts)	Gold plated
RoHS	compliant with exemption, compliant

Specifications and approvals

IEC 61076-2-101
UL 1977 ECBT2.E102079
CSA-C22.2 No. 182.3 ECBT8.E102079

Identification	Part number Male	Part number Female	Drawing (dimensions in mm)
Circular connectors M12, PCB adapter, Straight, Reflow soldering termination (THR), Shielded, Pack contents: 60 pieces in a tray  Order housings separately	21 03 321 1818	21 03 321 2818	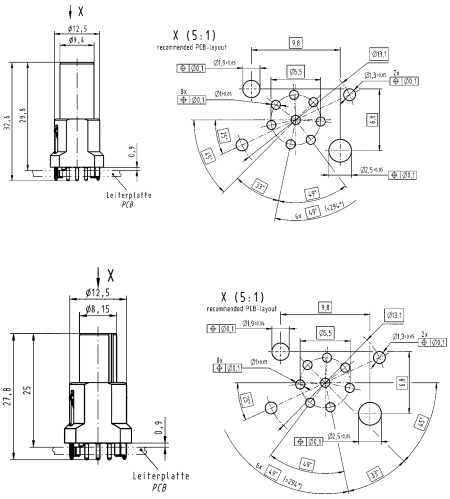

Identification	Part number Male	Part number Female	Drawing (dimensions in mm)
Circular connectors M12, Housing, for rear mounting, Pack contents: 10 pieces 	21 03 301 1000	21 03 301 2000	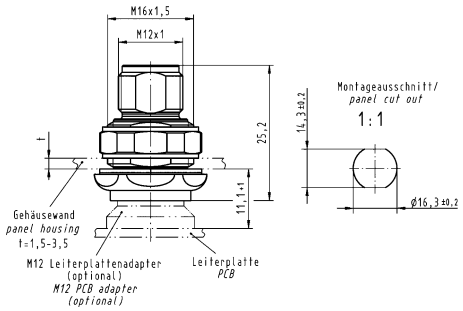 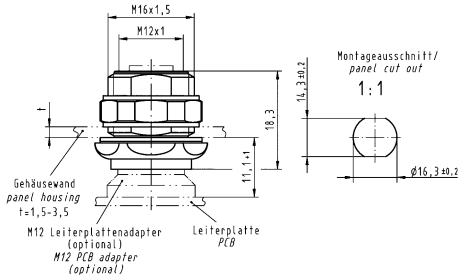
Circular connectors M12, PushPull, Housing, for front mounting, Pack contents: 10 pieces 	21 03 301 1003	21 03 301 2003	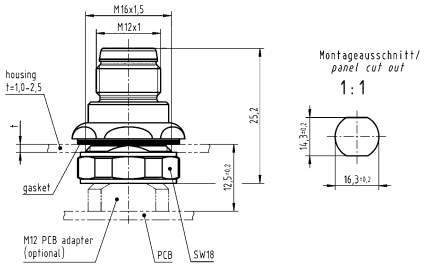 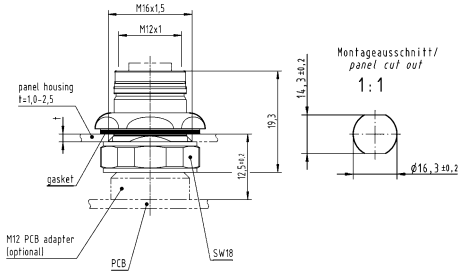

M12

Number of contacts

8

Reflow soldering termination (THR)
Shielded

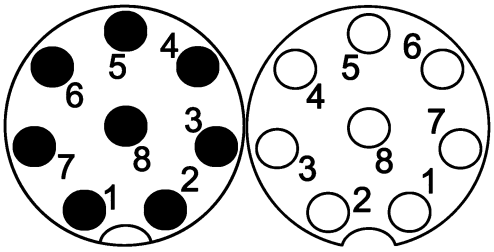

Technical characteristics

Number of contacts	8
Rated current	2 A
Rated voltage	30 V
Rated impulse voltage	1.5 kV
Pollution degree	3
Insulation resistance	>10^8 Ω
Contact resistance	≤10 mΩ
Mating cycles	≥100
Locking type	Screw locking, PushPull
Degree of protection acc. to IEC 60529	IP65 / IP67, when mated
Tightening torque	2 Nm Lock nut

Technical characteristics

Material (insert)	Liquid crystal polymer (LCP)
Material (hood/housing)	Zinc die-cast
Material (contacts)	Copper alloy
Surface (contacts)	Gold plated
RoHS	compliant with exemption

Specifications and approvals

IEC 61076-2-101
UL 1977 ECBT2.E102079
CSA-C22.2 No. 182.3 ECBT8.E102079

Identification	Part number Male	Part number Female	Drawing (dimensions in mm)
Circular connectors M12, PCB adapter, Straight, incl. housing, for rear mounting, Reflow soldering termination (THR), Shielded 	21 03 321 1830	21 03 321 2830	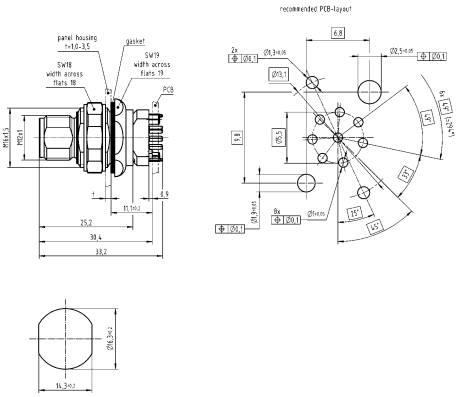 Panel cut out 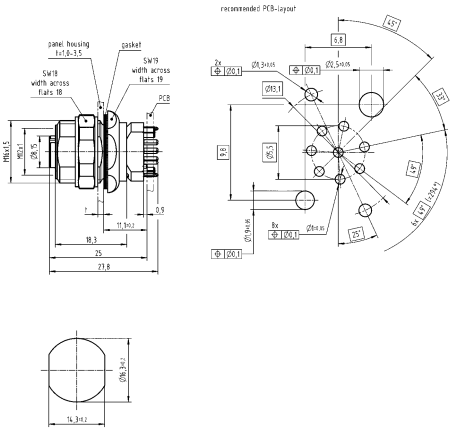 Panel cut out

Identification	Part number Male	Part number Female	Drawing (dimensions in mm)
Circular connectors M12, PushPull, PCB adapter, Straight, incl. housing, for front mounting, Reflow soldering termination (THR), Shielded 	21 03 321 1831	21 03 321 2831	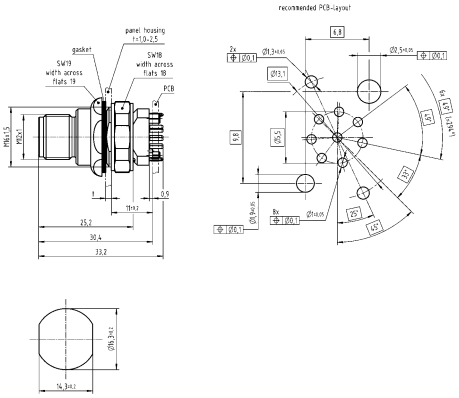 Panel cut out 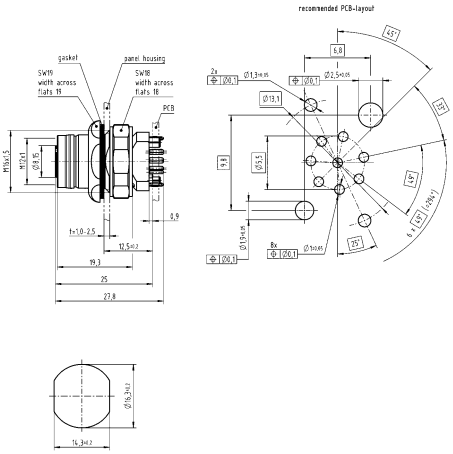 Panel cut out

M12

Number of contacts

8

Reflow soldering termination (SMT)
Unshielded

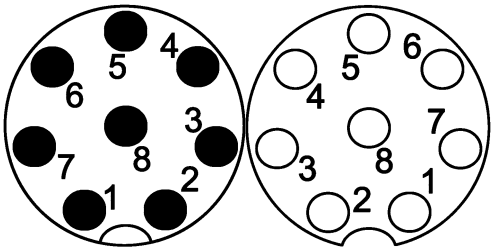

Technical characteristics

Number of contacts	8
Rated current	2 A
Rated voltage	30 V
Pollution degree	3
Insulation resistance	>10^8 Ω
Contact resistance	≤10 mΩ
Mating cycles	≥100
Locking type	Screw locking
Degree of protection acc. to IEC 60529	IP67, when mated

Technical characteristics

Tightening torque	1 Nm Lock nut
Material (insert)	Liquid crystal polymer (LCP)
Material (contacts)	Copper alloy
Surface (contacts)	Gold plated
RoHS	compliant with exemption

Specifications and approvals

IEC 61076-2-101

Identification	Part number Male	Part number Female	Drawing (dimensions in mm)
Circular connectors M12, PCB adapter, Straight, Reflow soldering termination (SMT), Unshielded  Order housings separately	21 03 311 1815	21 03 311 2810	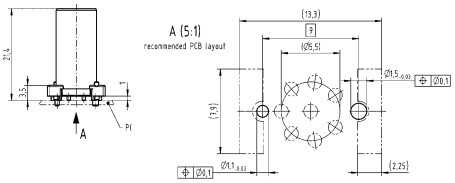 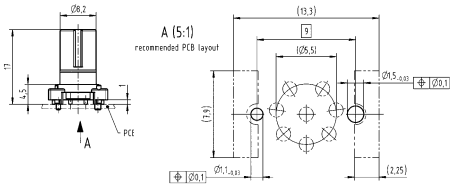
Circular connectors M12, PCB adapter, Straight, Reflow soldering termination (SMT), Unshielded, Pack contents: 75 pieces on reel  Order housings separately	21 03 311 1816	21 03 311 2811	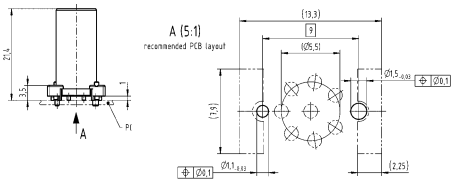 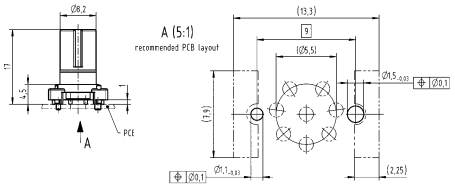

Identification	Part number Male	Part number Female	Drawing (dimensions in mm)
Circular connectors M12, Housing, for front mounting, M14 x 1, 9 mm  If necessary, order lock nut 21 41 000 0011 separately.	21 41 000 0012	21 41 000 0010	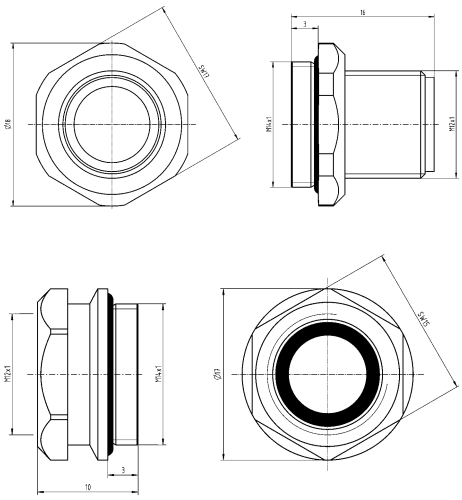
Circular connectors M12, Housing, for front mounting, M14 x 1, 13 mm  If necessary, order lock nut 21 41 000 0011 separately.		21 41 000 0013	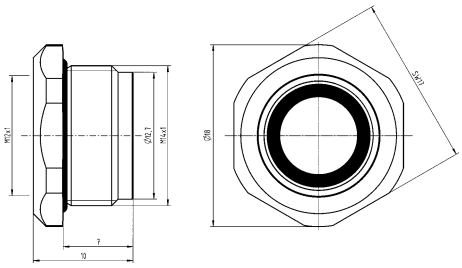

M12

Number of contacts

8

Reflow soldering termination (SMT)
Shielded

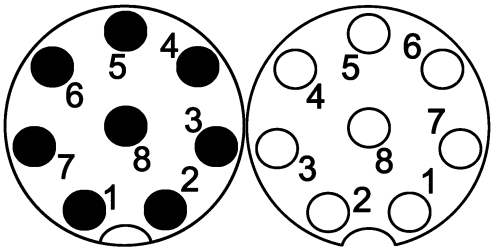

Technical characteristics

Number of contacts	8
Rated current	2 A
Rated voltage	30 V
Pollution degree	3
Insulation resistance	>10^8 Ω
Contact resistance	≤10 mΩ
Mating cycles	≥100
Locking type	Screw locking
Degree of protection acc. to IEC 60529	IP67, when mated

Technical characteristics

Tightening torque	1 Nm Lock nut
Material (insert)	Liquid crystal polymer (LCP)
Material (contacts)	Copper alloy
Surface (contacts)	Gold plated
RoHS	compliant with exemption

Specifications and approvals

IEC 61076-2-101

Identification	Part number Male	Part number Female	Drawing (dimensions in mm)
Circular connectors M12, PCB adapter, Straight, Reflow soldering termination (SMT), Shielded  Order housings separately	21 03 321 1802	21 03 321 2802	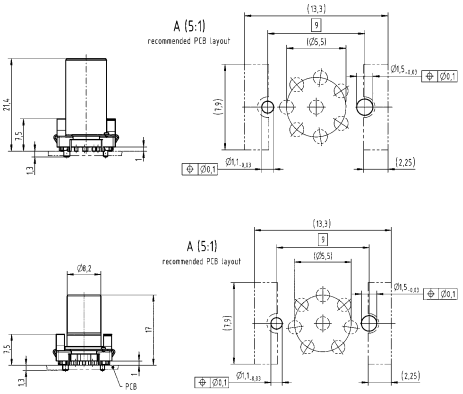
Circular connectors M12, PCB adapter, Straight, Reflow soldering termination (SMT), Shielded, Pack contents: 75 pieces on reel  Order housings separately	21 03 321 1803	21 03 321 2803	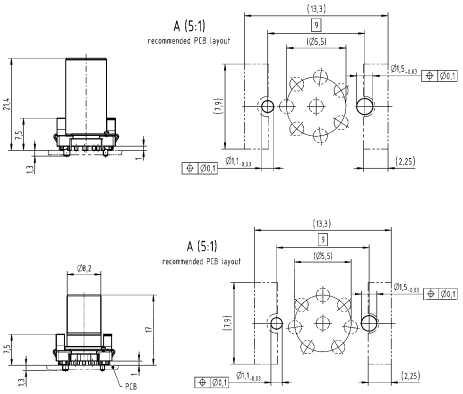

Identification	Part number Male	Part number Female	Drawing (dimensions in mm)
Circular connectors M12, Housing, for front mounting, M14 x 1, 9 mm  If necessary, order lock nut 21 41 000 0011 separately.	21 41 000 0012	21 41 000 0010	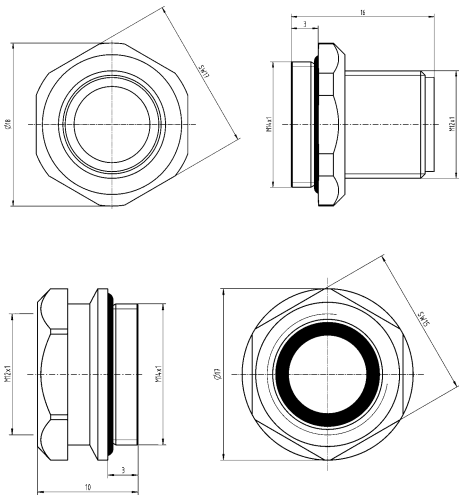
Circular connectors M12, Housing, for front mounting, M14 x 1, 13 mm  If necessary, order lock nut 21 41 000 0011 separately.		21 41 000 0013	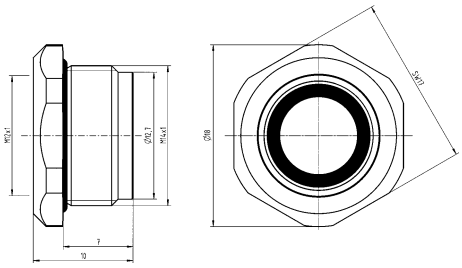

M12

Number of contacts

5

Reflow soldering termination (THR)
Shielded

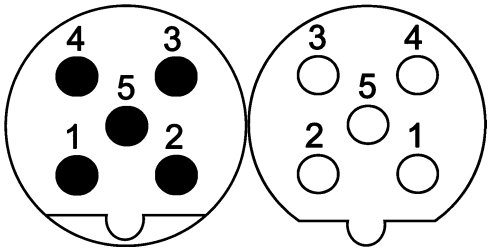

Technical characteristics

Number of contacts	5
Rated current	4 A
Rated voltage	50 V
Rated impulse voltage	1.5 kV
Pollution degree	3
Insulation resistance	>10^8 Ω
Contact resistance	≤10 mΩ
Mating cycles	≥100
Locking type	Screw locking, PushPull
Degree of protection acc. to IEC 60529	IP65 / IP67, when mated
Tightening torque	2 Nm Lock nut

Technical characteristics

Material (insert)	Liquid crystal polymer (LCP)
Material (contacts)	Copper alloy
Surface (contacts)	Gold plated
RoHS	compliant with exemption, compliant

Specifications and approvals

IEC 61076-2-101
UL 1977 ECBT2.E102079
CSA-C22.2 No. 182.3 ECBT8.E102079

Identification	Part number Male	Part number Female	Drawing (dimensions in mm)
Circular connectors M12, PCB adapter, Straight, Reflow soldering termination (THR), Shielded, Pack contents: 60 pieces in a tray  Order housings separately	21 03 341 1518	21 03 341 2518	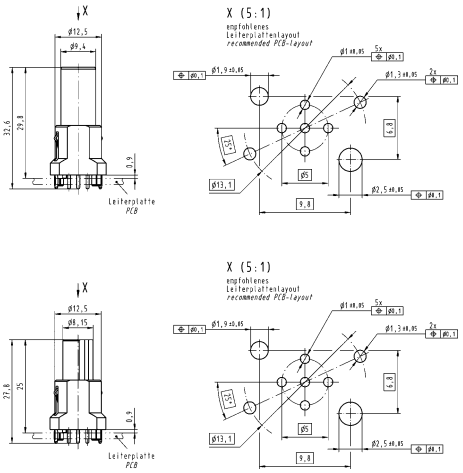

Identification	Part number Male	Part number Female	Drawing (dimensions in mm)
Circular connectors M12, Housing, for rear mounting, Pack contents: 10 pieces 	21 03 301 1000	21 03 301 2000	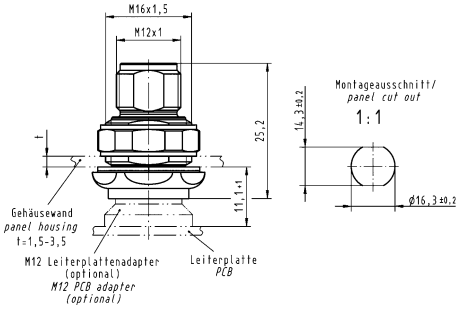 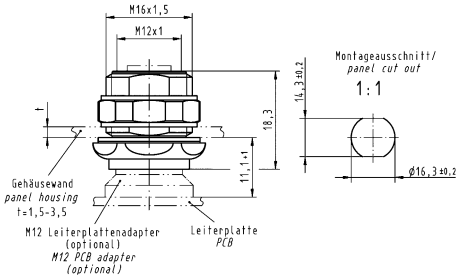
Circular connectors M12, PushPull, Housing, for front mounting, Pack contents: 10 pieces 	21 03 301 1003	21 03 301 2003	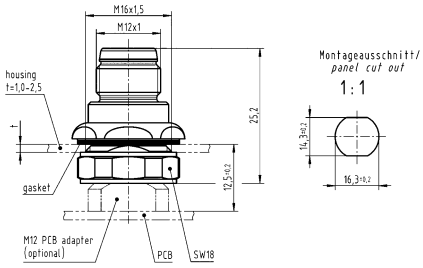 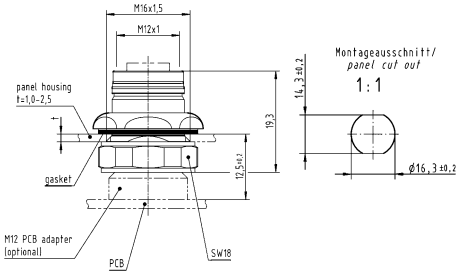

M12

Number of contacts

5

Reflow soldering termination (THR)
Shielded

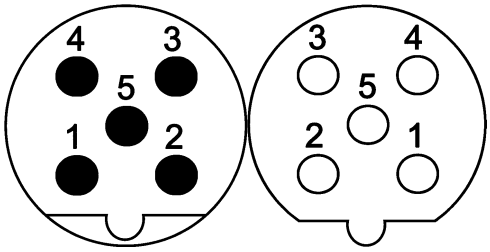

Technical characteristics

Number of contacts	5
Rated current	4 A
Rated voltage	50 V
Rated impulse voltage	1.5 kV
Pollution degree	3
Insulation resistance	>10^8 Ω
Contact resistance	≤10 mΩ
Mating cycles	≥100
Locking type	Screw locking
Degree of protection acc. to IEC 60529	IP65 / IP67, when mated
Tightening torque	2 Nm Lock nut

Technical characteristics

Material (insert)	Liquid crystal polymer (LCP)
Material (hood/housing)	Zinc die-cast
Material (contacts)	Copper alloy
Surface (contacts)	Gold plated
RoHS	compliant with exemption

Specifications and approvals

IEC 61076-2-101
UL 1977 ECBT2.E102079
CSA-C22.2 No. 182.3 ECBT8.E102079

Identification	Part number Male	Part number Female	Drawing (dimensions in mm)
Circular connectors M12, PCB adapter, Straight, incl. housing, for rear mounting, Reflow soldering termination (THR), Shielded 	21 03 341 1530	21 03 341 2530	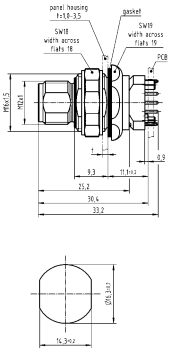 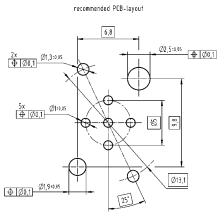 Panel cut out 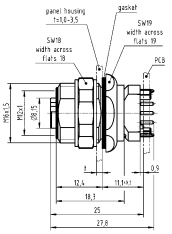 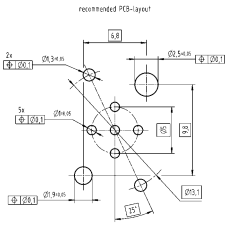 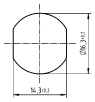 Panel cut out

Identification	Part number Male	Part number Female	Drawing (dimensions in mm)
Circular connectors M12, PCB adapter, Straight, incl. housing, for front mounting, Reflow soldering termination (THR), Shielded 	21 03 341 1531	21 03 341 2531	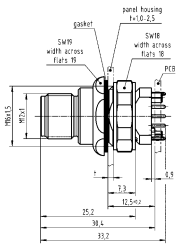 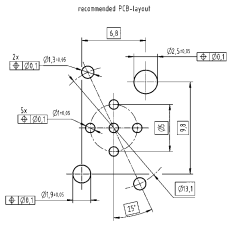 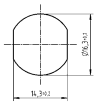 Panel cut out 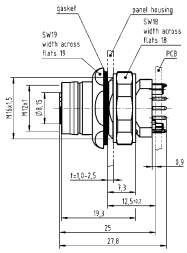 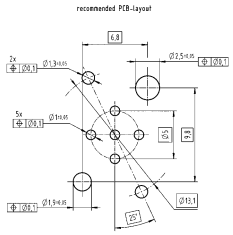  Panel cut out

M12

Number of contacts

5

Reflow soldering termination (THR)
Shielded

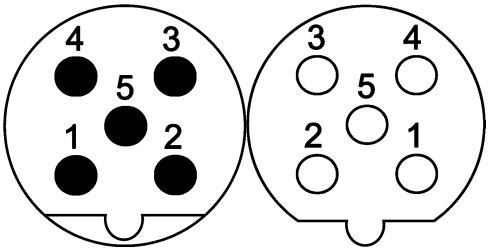

Technical characteristics

Number of contacts	5
Rated current	4 A
Rated voltage	50 V
Rated impulse voltage	1.5 kV
Pollution degree	3
Insulation resistance	>10^8 Ω
Contact resistance	≤10 mΩ
Mating cycles	≥100
Locking type	Screw locking
Degree of protection acc. to IEC 60529	IP67, when mated

Technical characteristics

Tightening torque	2 Nm Lock nut
Material (insert)	Polyamide (PA)
Material (hood/housing)	Zinc die-cast
Material (contacts)	Copper alloy
Surface (contacts)	Gold plated
RoHS	compliant with exemption

Specifications and approvals

IEC 61076-2-101

Identification	Part number Male	Part number Female	Drawing (dimensions in mm)
Circular connectors M12, PCB adapter, Straight, for rear mounting, Reflow soldering termination (THR), Shielded, IP67 	21 03 341 1505	21 03 341 2505	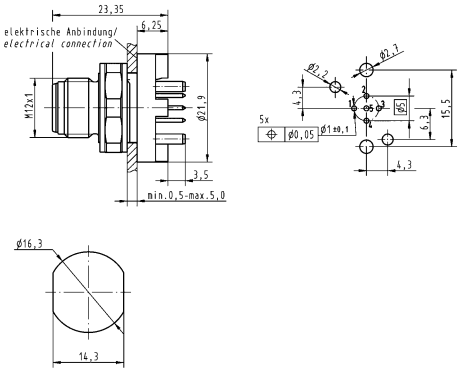 Panel cut out 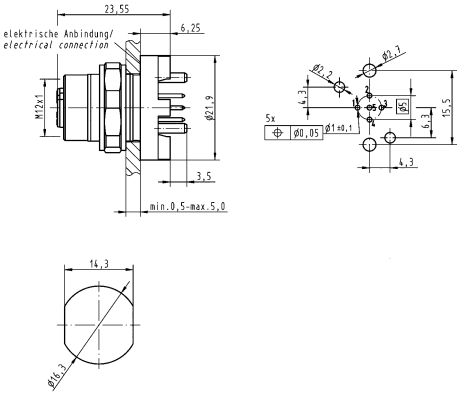 Panel cut out

Number of contacts

4

Reflow soldering termination (THR)
Shielded

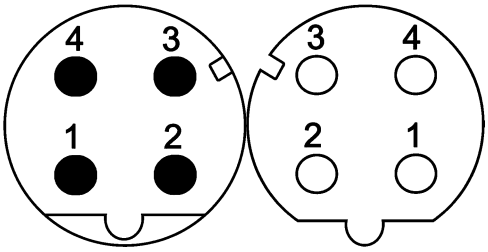

Technical characteristics

Number of contacts	4
Rated current	4 A
Rated voltage	50 V
Rated impulse voltage	2.5 kV
Pollution degree	3
Insulation resistance	>10^8 Ω
Contact resistance	≤10 mΩ
Mating cycles	≥100
Locking type	Screw locking, PushPull
Degree of protection acc. to IEC 60529	IP65 / IP67, when mated
Transmission characteristics	Cat. 5, Class D up to 100 MHz
Tightening torque	2 Nm Lock nut
Material (insert)	Liquid crystal polymer (LCP)

Technical characteristics

Material (contacts)	Copper alloy
Surface (contacts)	Gold plated
RoHS	compliant with exemption, compliant

Specifications and approvals

IEC 61076-2-101
UL 1977 ECBT2.E102079
CSA-C22.2 No. 182.3 ECBT8.E102079

Identification	Part number Male	Part number Female	Drawing (dimensions in mm)
Circular connectors M12, PCB adapter, Straight, Reflow soldering termination (THR), Shielded, Pack contents: 60 pieces in a tray  Order housings separately	21 03 381 1418	21 03 381 2418	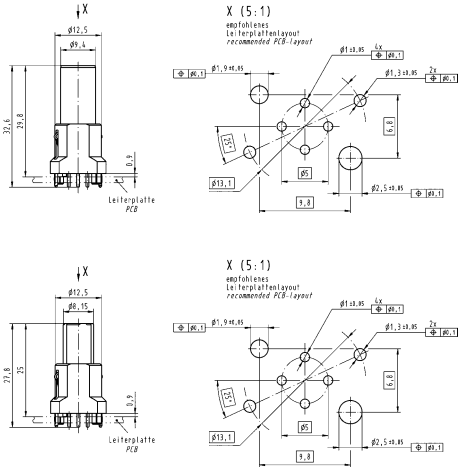

M12

Identification	Part number Male	Part number Female	Drawing (dimensions in mm)
Circular connectors M12, Housing, for rear mounting, Pack contents: 10 pieces 	21 03 301 1000	21 03 301 2000	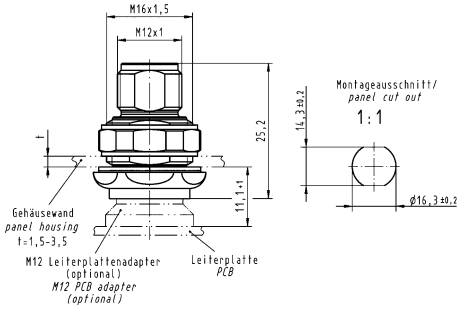 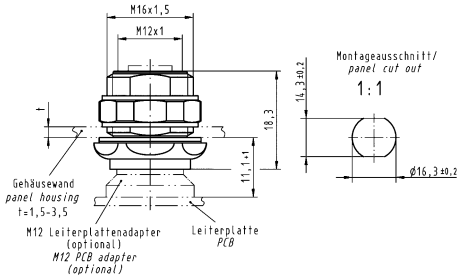
Circular connectors M12, PushPull, Housing, for front mounting, Pack contents: 10 pieces 	21 03 301 1003	21 03 301 2003	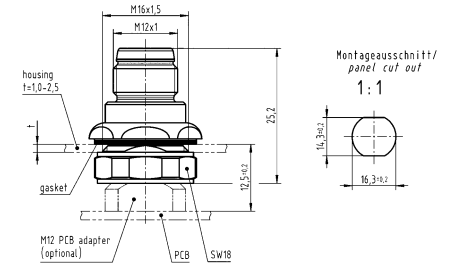 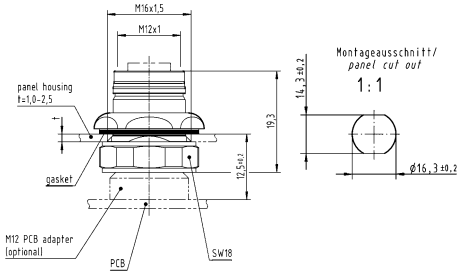

Number of contacts

4

Reflow soldering termination (THR)
Shielded

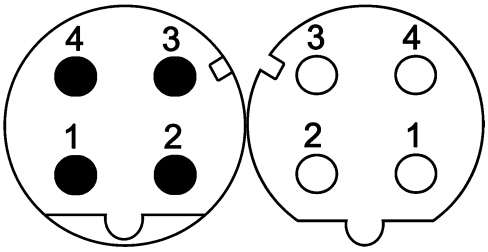

Technical characteristics

Number of contacts	4
Rated current	4 A
Rated voltage	50 V
Rated impulse voltage	2.5 kV
Pollution degree	3
Insulation resistance	>10^8 Ω
Contact resistance	≤10 mΩ
Mating cycles	≥100
Locking type	Screw locking, PushPull
Degree of protection acc. to IEC 60529	IP65 / IP67, when mated
Transmission characteristics	Cat. 5, Class D up to 100 MHz
Tightening torque	2 Nm Lock nut

Technical characteristics

Material (insert)	Liquid crystal polymer (LCP)
Material (hood/housing)	Zinc die-cast
Material (contacts)	Copper alloy
Surface (contacts)	Gold plated
RoHS	compliant with exemption

Specifications and approvals

IEC 61076-2-101
UL 1977 ECBT2.E102079
CSA-C22.2 No. 182.3 ECBT8.E102079

Identification	Part number Male	Part number Female	Drawing (dimensions in mm)
Circular connectors M12, PCB adapter, Straight, incl. housing, for rear mounting, Reflow soldering termination (THR), Shielded 	21 03 381 1430	21 03 381 2430	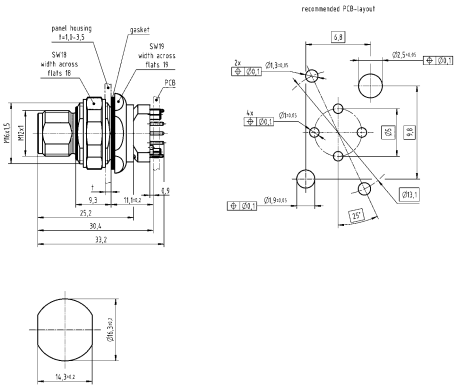 Panel cut out 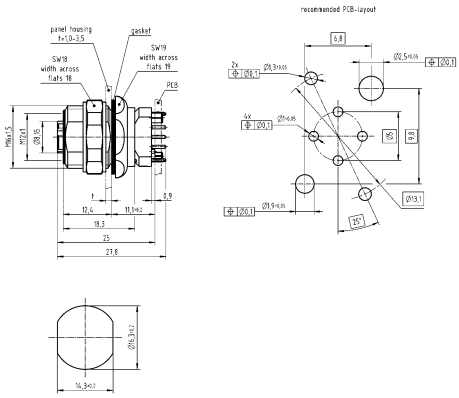 Panel cut out

M12

Identification	Part number Male	Part number Female	Drawing (dimensions in mm)
Circular connectors M12, PushPull, PCB adapter, Straight, incl. housing, for front mounting, Reflow soldering termination (THR), Shielded 	21 03 381 1431	21 03 381 2431	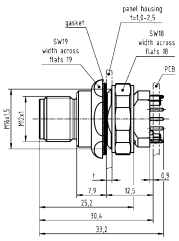 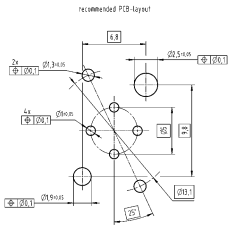  Panel cut out 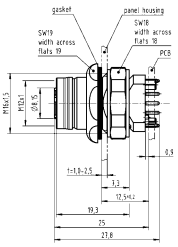 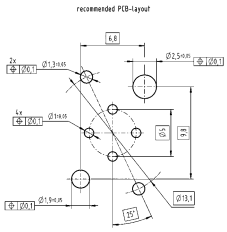  Panel cut out

Number of contacts

4

Reflow soldering termination (THR)
Shielded

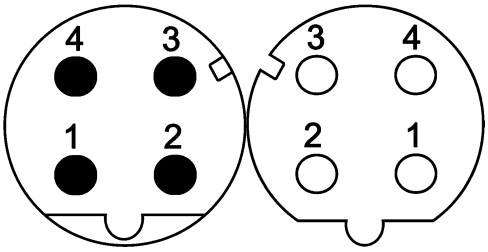

Technical characteristics

Number of contacts	4
Rated current	4 A
Rated voltage	50 V
Rated impulse voltage	2.5 kV
Pollution degree	3
Insulation resistance	>10^8 Ω
Contact resistance	≤10 mΩ
Mating cycles	≥100
Locking type	Screw locking
Degree of protection acc. to IEC 60529	IP67, when mated, IP20
Transmission characteristics	Cat. 5, Class D up to 100 MHz
Tightening torque	2 Nm Lock nut
Material (insert)	Polyamide (PA)

Technical characteristics

Material (hood/housing)	Zinc die-cast
Material (contacts)	Copper alloy
Surface (contacts)	Gold plated
RoHS	compliant with exemption

Specifications and approvals

IEC 61076-2-101
UL 1977 ECBT2.E235076
CSA-C22.2 No. 182.3 ECBT8.E235076

Identification	Part number Male	Part number Female	Drawing (dimensions in mm)
Circular connectors M12, PCB adapter, Straight, for rear mounting, Reflow soldering termination (THR), Shielded, IP67	21 03 371 1400	21 03 371 2415	

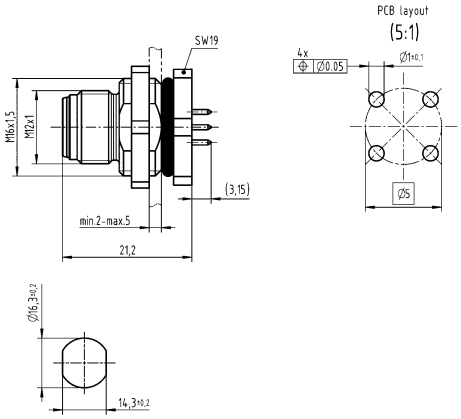

Panel cut out

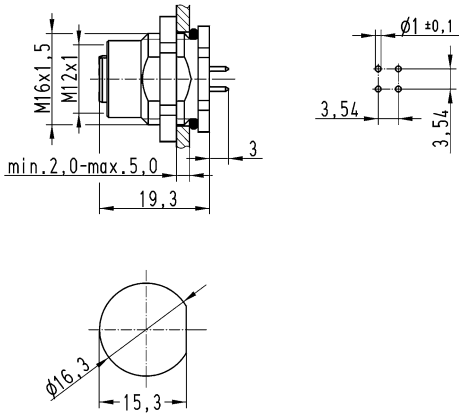

Panel cut out

M12

Identification	Part number Male	Part number Female	Drawing (dimensions in mm)
Circular connectors M12, With fixing hole, PCB adapter, Straight, for rear mounting, Reflow soldering termination (THR), Shielded, IP20 		21 03 381 6410	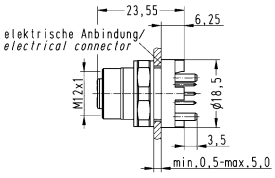 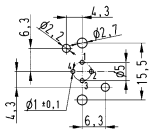 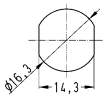 Panel cut out
Circular connectors M12, With fixing hole, PCB adapter, Straight, for rear mounting, Reflow soldering termination (THR), Shielded, IP67 		21 03 381 6420	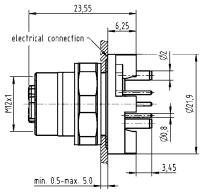 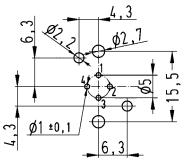 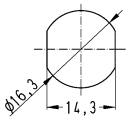 Panel cut out

Number of contacts

4

Reflow soldering termination (THR)
Shielded

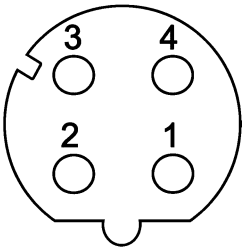

Technical characteristics

Number of contacts	4
Rated current	4 A
Rated voltage	50 V
Rated impulse voltage	1.5 kV
Pollution degree	3
Insulation resistance	>10^8 Ω
Contact resistance	≤10 mΩ
Mating cycles	≥100
Locking type	Screw locking
Degree of protection acc. to IEC 60529	IP20, IP67, when mated
Transmission characteristics	Cat. 5, Class D up to 100 MHz
Tightening torque	2 Nm Lock nut
Material (insert)	Liquid crystal polymer (LCP)

Technical characteristics

Material (hood/housing)	Zinc die-cast
Material (contacts)	Copper alloy
Surface (contacts)	Gold plated
RoHS	compliant with exemption

Specifications and approvals

IEC 61076-2-101
UL 1977 ECBT2.E235076
CSA-C22.2 No. 182.3 ECBT8.E235076

Identification	Part number Female	Drawing (dimensions in mm)
Circular connectors M12, PCB adapter, Angled, for rear mounting, Reflow soldering termination (THR), Shielded, IP20  Coding bottom left = Cable entry direction on the angled connector: to the right	21 03 381 4410	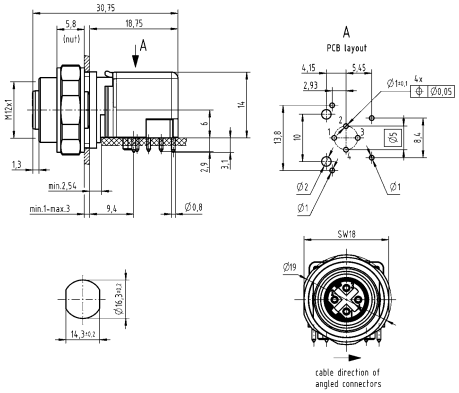 Panel cut out
Circular connectors M12, PCB adapter, Angled, for rear mounting, Reflow soldering termination (THR), Shielded, IP20  Coding top left = Cable entry direction on the angled connector: downwards	21 03 381 4411	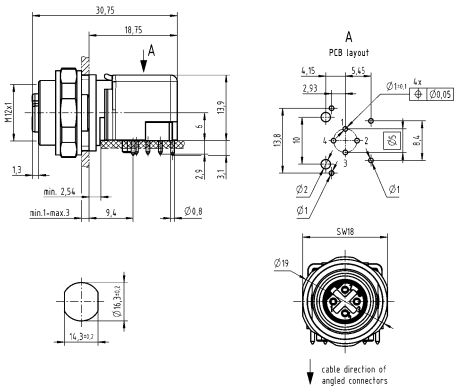 Panel cut out

M12

Identification	Part number Female	Drawing (dimensions in mm)
Circular connectors M12, With fixing hole, PCB adapter, Angled, for rear mounting, Reflow soldering termination (THR), Shielded, IP20  Coding bottom left = Cable entry direction on the angled connector: to the right	21 03 381 4412	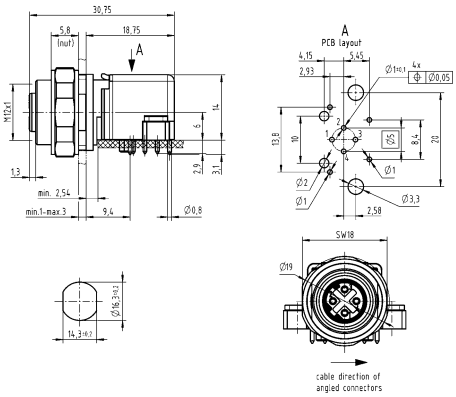 Panel cut out
Circular connectors M12, With fixing hole, PCB adapter, Angled, for rear mounting, Reflow soldering termination (THR), Shielded, IP20  Coding top left = Cable entry direction on the angled connector: downwards	21 03 381 4413	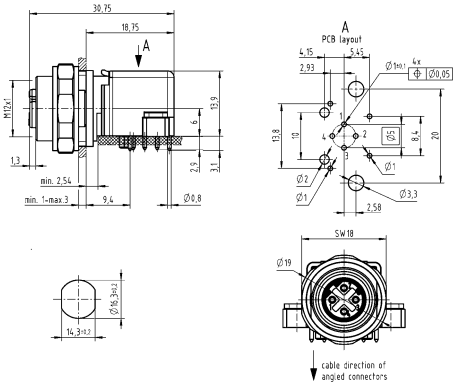 Panel cut out
Circular connectors M12, PCB adapter, Angled, for rear mounting, Reflow soldering termination (THR), Shielded, IP67  Coding bottom left = Cable entry direction on the angled connector: to the right	21 03 381 4430	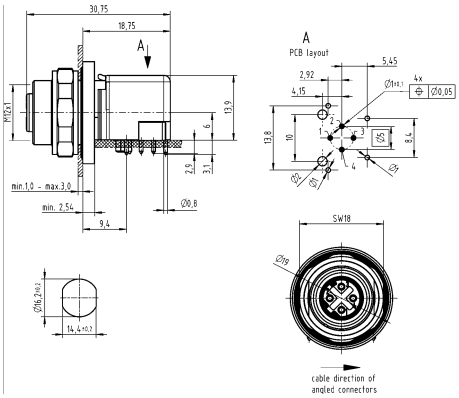 Panel cut out

Identification	Part number Female	Drawing (dimensions in mm)
Circular connectors M12, With fixing hole, PCB adapter, Angled, for rear mounting, Reflow soldering termination (THR), Shielded, IP67  Coding bottom left = Cable entry direction on the angled connector: to the right	21 03 381 4432	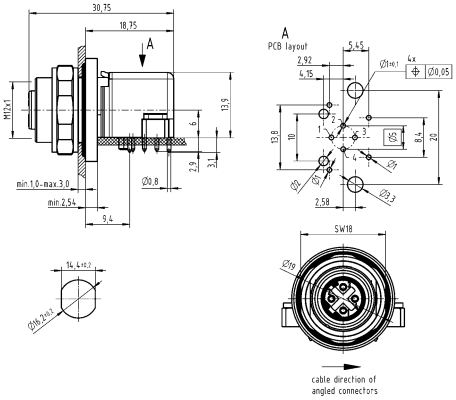 Panel cut out

M12

Number of contacts

4

Reflow soldering termination (THR)
Shielded

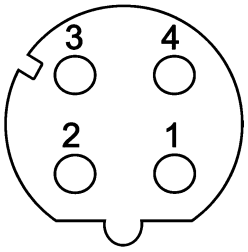

Technical characteristics

Number of contacts	4
Rated current	4 A
Rated voltage	250 V
Rated impulse voltage	1.5 kV
Pollution degree	3
Insulation resistance	>10^8 Ω
Contact resistance	≤10 mΩ
Mating cycles	≥100
Locking type	Screw locking, PushPull
Degree of protection acc. to IEC 60529	IP20, IP67, when mated
Transmission characteristics	Cat. 5, Class D up to 100 MHz
Tightening torque	2 Nm Lock nut

Technical characteristics

Material (insert)	Liquid crystal polymer (LCP)
Material (hood/housing)	Zinc die-cast
Material (contacts)	Copper alloy
Surface (contacts)	Gold plated
RoHS	compliant with exemption

Specifications and approvals

IEC 61076-2-101

Identification	Part number Female	Drawing (dimensions in mm)
Circular connectors M12, PushPull, PCB adapter, Angled, for rear mounting, Reflow soldering termination (THR), Shielded, IP20 	21 03 381 4434	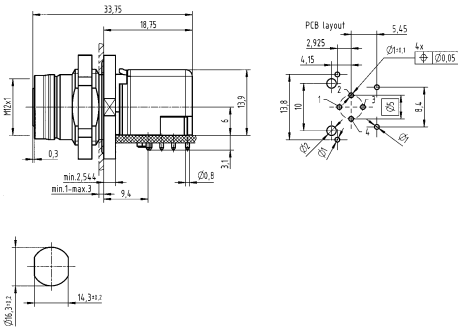 Panel cut out
Circular connectors M12, PushPull, With fixing hole, PCB adapter, Angled, for rear mounting, Reflow soldering termination (THR), Shielded, IP20 	21 03 381 4435	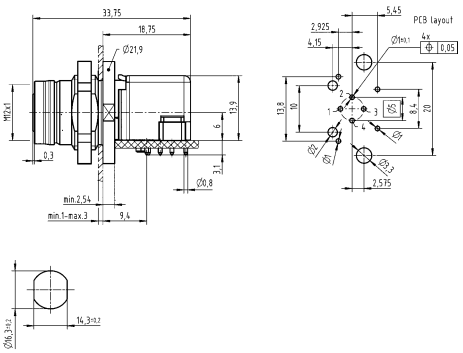 Panel cut out

Identification	Part number Female	Drawing (dimensions in mm)
Circular connectors M12, PushPull, PCB adapter, Angled, for rear mounting, Reflow soldering termination (THR), Shielded, IP67 	21 03 381 4436	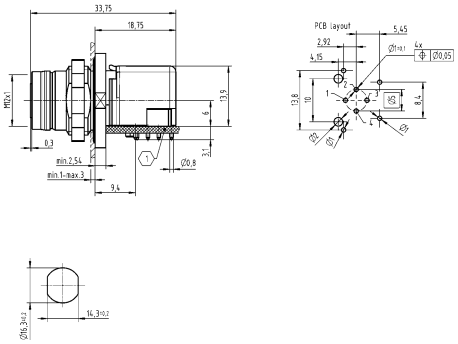 Panel cut out
Circular connectors M12, PushPull, With fixing hole, PCB adapter, Angled, for rear mounting, Reflow soldering termination (THR), Shielded, IP67 	21 03 381 4437	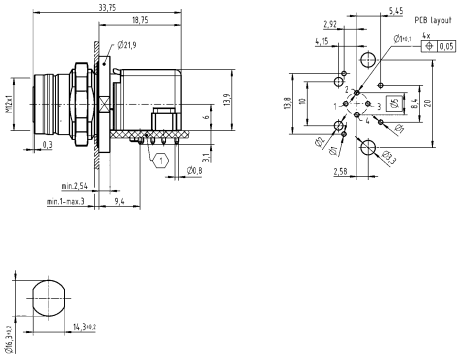 Panel cut out

M12

Number of contacts

4

Reflow soldering termination (SMT)
Shielded

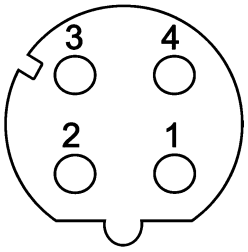

Technical characteristics

Number of contacts	4
Rated current	4 A
Rated voltage	250 V
Pollution degree	3
Insulation resistance	>10^8 Ω
Mating cycles	≥100
Locking type	Screw locking
Degree of protection acc. to IEC 60529	IP67, when mated
Transmission characteristics	Cat. 5, Class D up to 100 MHz

Technical characteristics

Tightening torque	1 Nm Lock nut
Material (insert)	Liquid crystal polymer (LCP)
Material (contacts)	Copper alloy
Surface (contacts)	Gold plated
RoHS	compliant with exemption

Specifications and approvals

IEC 61076-2-101

Identification	Part number Female	Drawing (dimensions in mm)
Circular connectors M12, PCB adapter, Straight, Reflow soldering termination (SMT), Shielded  Order housings separately	21 03 381 2404	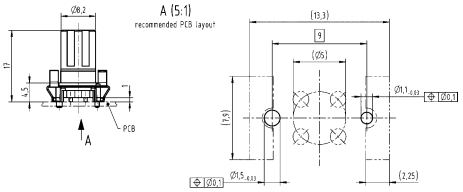
Circular connectors M12, PCB adapter, Straight, Reflow soldering termination (SMT), Shielded, Pack contents: 75 pieces on reel  Order housings separately	21 03 381 2405	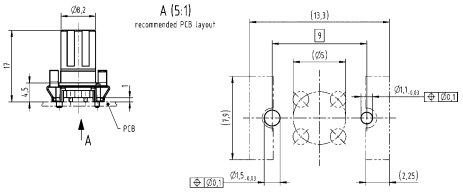
Circular connectors M12, Housing, for front mounting, M14 x 1, 9 mm  If necessary, order lock nut 21 41 000 0011 separately.	21 41 000 0010	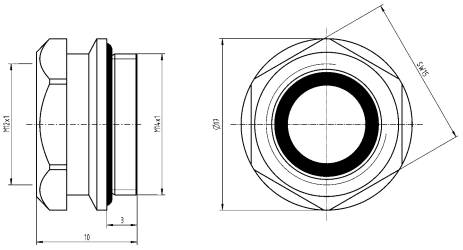

Identification	Part number Female	Drawing (dimensions in mm)
Circular connectors M12, Housing, for front mounting, M14 x 1, 13 mm  If necessary, order lock nut 21 41 000 0011 separately.	21 41 000 0013	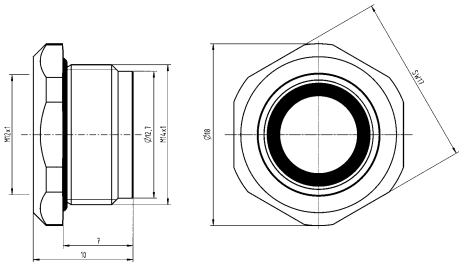

M12

Number of contacts

4

Wave soldering termination
Shielded

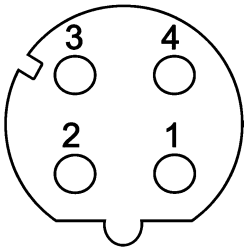

Technical characteristics

Number of contacts	4
Rated current	4 A
Rated voltage	250 V
Pollution degree	3
Insulation resistance	>10^8 Ω
Mating cycles	≥100
Locking type	Screw locking
Degree of protection acc. to IEC 60529	IP67, when mated
Transmission characteristics	Cat. 5, Class D up to 100 MHz
Tightening torque	1 Nm Lock nut

Technical characteristics

Material (insert)	Polyamide (PA)
Material (hood/housing)	Copper-zinc alloy
Material (contacts)	Copper alloy
Surface (contacts)	Gold plated
RoHS	compliant with exemption

Specifications and approvals

IEC 61076-2-101

Identification		Part number Female	Drawing (dimensions in mm)
Circular connectors M12, PCB adapter, Angled, for rear mounting, Wave soldering termination, Shielded		21 03 381 4440	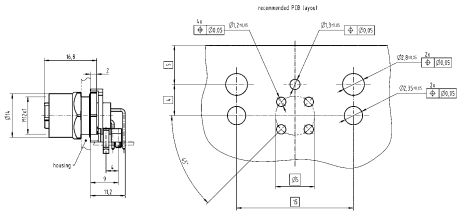  Panel cut out

Number of contacts

8

Reflow soldering termination (THR)
Shielded

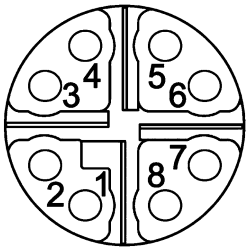

Technical characteristics

Number of contacts	8
Rated current	0.5 A
Rated voltage	50 V
Rated impulse voltage	0.8 kV
Pollution degree	3
Insulation resistance	>10^8 Ω
Contact resistance	≤10 mΩ
Mating cycles	≥100
Locking type	Screw locking, PushPull
Degree of protection acc. to IEC 60529	IP65 / IP67, when mated
Transmission characteristics	Cat. 6_A, Class E_A up to 500 MHz, Cat. 5, Class D up to 100 MHz
Tightening torque	2 Nm Lock nut
Material (insert)	Liquid crystal polymer (LCP)

Technical characteristics

Material (contacts)	Copper alloy
Surface (contacts)	Gold plated
RoHS	compliant with exemption, compliant

Specifications and approvals

IEC 61076-2-109
UL 1977 ECBT2.E102079
CSA-C22.2 No. 182.3 ECBT8.E102079

Identification		Part number Female	Drawing (dimensions in mm)
Circular connectors M12, PCB adapter, Straight, Reflow soldering termination (THR), Shielded, Pack contents: 60 pieces in a tray  Order housings separately	Cat. 5 Cat. 6_A	21 03 381 2807 21 03 381 2806	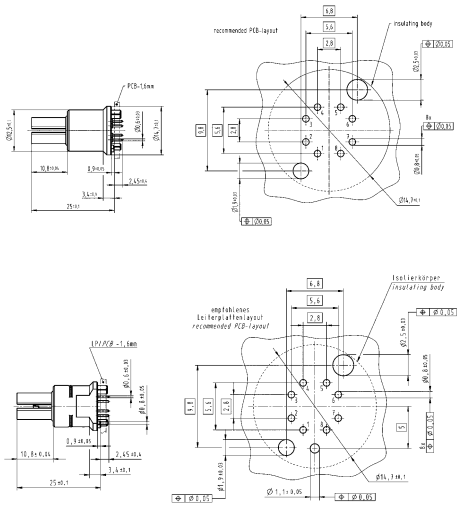
Circular connectors M12, PCB adapter, Angled, Reflow soldering termination (THR), Shielded, Pack contents: 30 pieces in a tray  Order housings separately	Cat. 6_A	21 03 381 4806	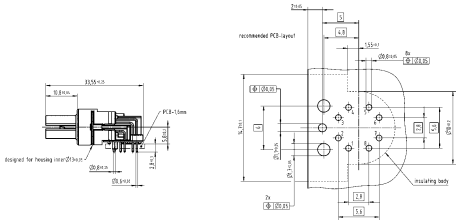

M12

Identification		Part number Female	Drawing (dimensions in mm)
Circular connectors M12, Housing, for rear mounting, Pack contents: 10 pieces 		21 03 301 2000	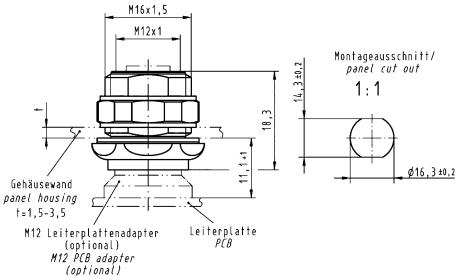
Circular connectors M12, PushPull, Housing, for front mounting, Pack contents: 10 pieces 		21 03 301 2003	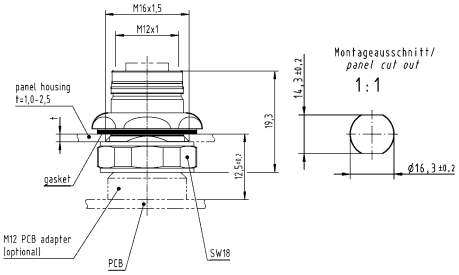

Number of contacts

8

Reflow soldering termination (THR)
Shielded

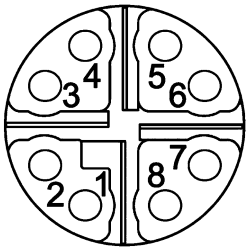

Technical characteristics

Number of contacts	8
Rated current	0.5 A
Rated voltage	50 V
Rated impulse voltage	0.8 kV
Pollution degree	3
Insulation resistance	>10^8 Ω
Contact resistance	≤10 mΩ
Mating cycles	≥100
Locking type	Screw locking, PushPull
Degree of protection acc. to IEC 60529	IP65 / IP67, when mated
Transmission characteristics	Cat. 6_A, Class E_A up to 500 MHz, Cat. 5, Class D up to 100 MHz
Tightening torque	2 Nm Lock nut
Material (insert)	Liquid crystal polymer (LCP)

Technical characteristics

Material (hood/housing)	Zinc die-cast
Material (contacts)	Copper alloy
Surface (contacts)	Gold plated
RoHS	compliant with exemption

Specifications and approvals

IEC 61076-2-109
UL 1977 ECBT2.E102079
CSA-C22.2 No. 182.3 ECBT8.E102079

Identification		Part number Female	Drawing (dimensions in mm)
Circular connectors M12, PushPull, PCB adapter, Straight, incl. housing, for front mounting, Reflow soldering termination (THR), Shielded, Pack contents: 60 pieces in a tray 	Cat. 5 Cat. 6_A	21 03 381 2803 21 03 381 2802	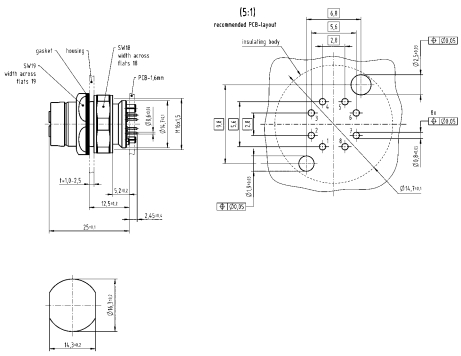 Panel cut out 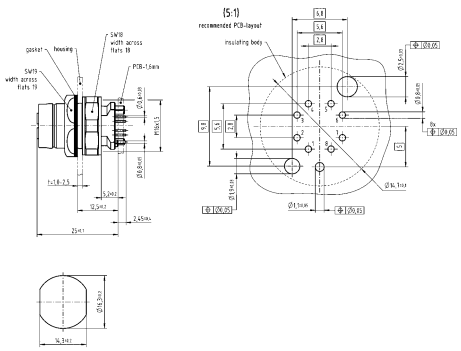 Panel cut out

M12

Identification		Part number Female	Drawing (dimensions in mm)
Circular connectors M12, PushPull, PCB adapter, Straight, incl. housing, for front mounting, Reflow soldering termination (THR), Shielded 	Cat. 5 Cat. 6_A	21 03 381 2814 21 03 381 2813	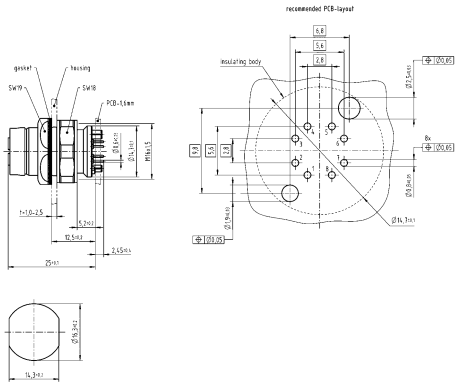 Panel cut out 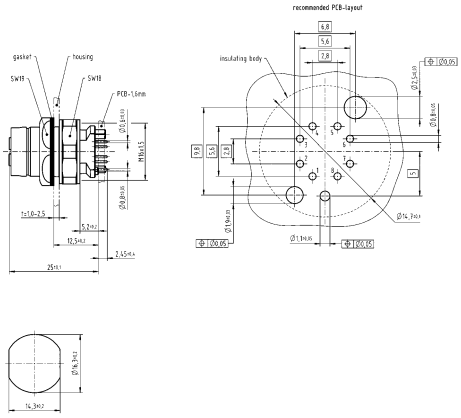 Panel cut out
Circular connectors M12, PCB adapter, Straight, incl. housing, for rear mounting, Reflow soldering termination (THR), Shielded, Pack contents: 60 pieces in a tray 	Cat. 5 Cat. 6_A	21 03 381 2809 21 03 381 2810	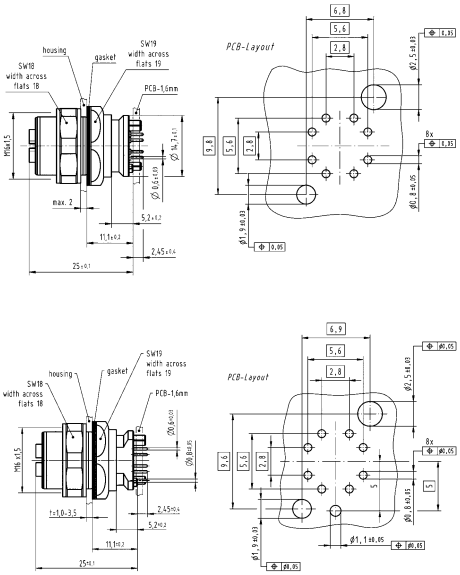

Identification		Part number Female	Drawing (dimensions in mm)
Circular connectors M12, PCB adapter, Straight, incl. housing, for rear mounting, Reflow soldering termination (THR), Shielded 	Cat. 5 Cat. 6_A	21 03 381 2812 21 03 381 2811	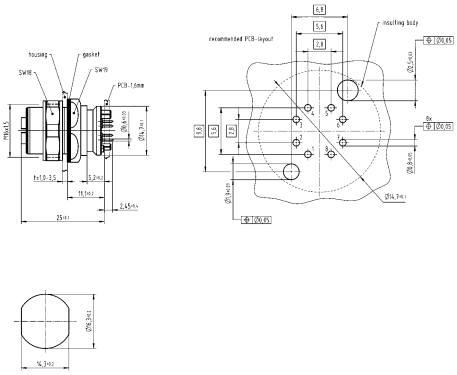 Panel cut out 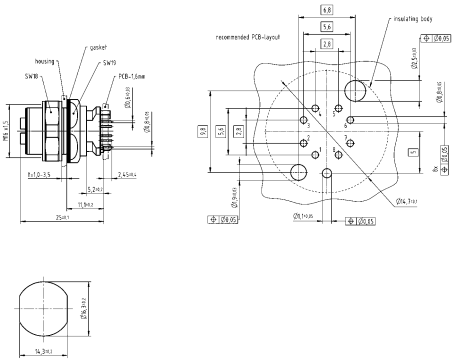 Panel cut out
Circular connectors M12, Long version, PCB adapter, Straight, incl. housing, for rear mounting, Reflow soldering termination (THR), Shielded, Pack contents: 60 pieces in a tray 	Cat. 5 Cat. 6_A	21 03 381 2805 21 03 381 2804	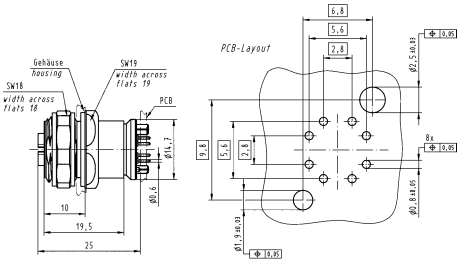 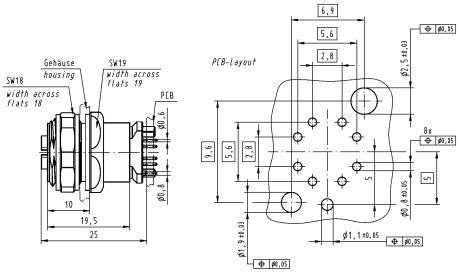

M12

Number of contacts

8

Reflow soldering termination (THR)
Shielded

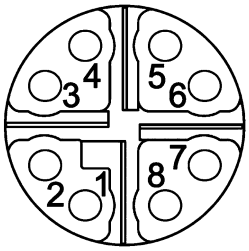

Technical characteristics

Number of contacts	8
Rated current	0.5 A
Rated voltage	50 V
Rated impulse voltage	0.8 kV
Pollution degree	3
Insulation resistance	>10^8 Ω
Contact resistance	≤10 mΩ
Mating cycles	≥100
Locking type	Screw locking, PushPull
Degree of protection acc. to IEC 60529	IP65 / IP67, when mated
Transmission characteristics	Cat. 6_A, Class E_A up to 500 MHz
Tightening torque	2 Nm Lock nut
Material (insert)	Liquid crystal polymer (LCP)

Technical characteristics

Material (hood/housing)	Zinc die-cast
Material (contacts)	Copper alloy
Surface (contacts)	Gold plated
RoHS	compliant with exemption

Specifications and approvals

IEC 61076-2-109
UL 1977 ECBT2.E102079
CSA-C22.2 No. 182.3 ECBT8.E102079

Identification	Part number Female	Drawing (dimensions in mm)
Circular connectors M12, PushPull, PCB adapter, Angled, incl. housing, for front mounting, Reflow soldering termination (THR), Shielded, Pack contents: 30 pieces in a tray 	21 03 381 4802	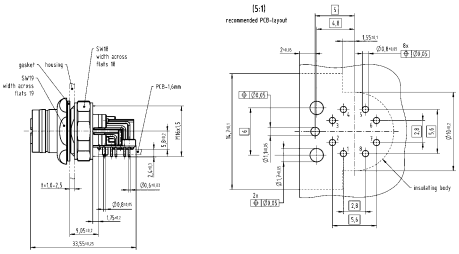  Panel cut out

Identification	Part number Female	Drawing (dimensions in mm)
Circular connectors M12, PushPull, PCB adapter, Angled, incl. housing, for front mounting, Reflow soldering termination (THR), Shielded 	21 03 381 4810	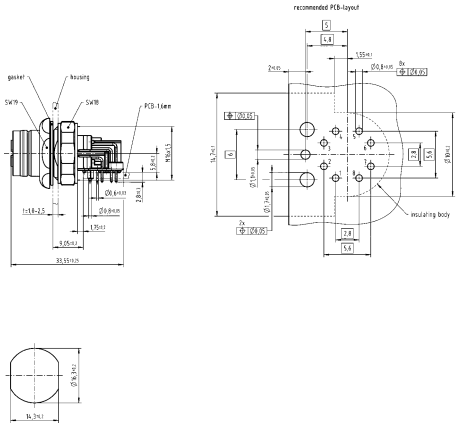 Panel cut out
Circular connectors M12, PCB adapter, Angled, incl. housing, for rear mounting, Reflow soldering termination (THR), Shielded, Pack contents: 30 pieces in a tray 	21 03 381 4807	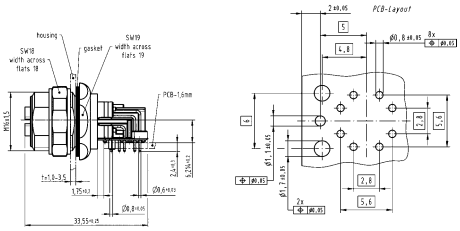
Circular connectors M12, PCB adapter, Angled, incl. housing, for rear mounting, Reflow soldering termination (THR), Shielded 	21 03 381 4809	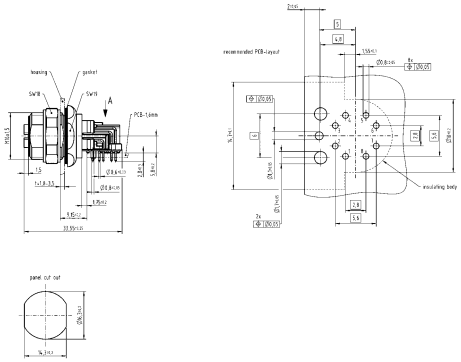 Panel cut out
Circular connectors M12, Long version, PCB adapter, Angled, incl. housing, for rear mounting, Reflow soldering termination (THR), Shielded, Pack contents: 30 pieces in a tray 	21 03 381 4804	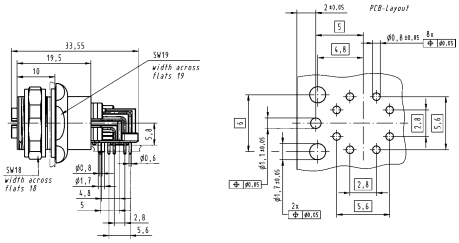

M12

Number of contacts

8

Reflow soldering termination (SMT)
Shielded

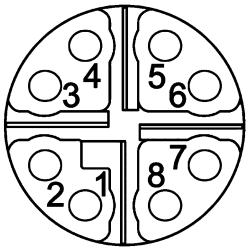

Technical characteristics

Number of contacts	8
Rated current	0.5 A
Rated voltage	48 V
Pollution degree	3
Insulation resistance	>10^8 Ω
Mating cycles	≥100
Locking type	Screw locking
Degree of protection acc. to IEC 60529	IP67, when mated
Transmission characteristics	Cat. 6_A, Class E_A up to 500 MHz

Technical characteristics

Tightening torque	1 Nm Lock nut
Material (insert)	Liquid crystal polymer (LCP)
Material (contacts)	Copper alloy
Surface (contacts)	Gold plated
RoHS	compliant with exemption

Specifications and approvals

IEC 61076-2-109

Identification	Part number Female	Drawing (dimensions in mm)
Circular connectors M12, PCB adapter, Straight, Reflow soldering termination (SMT), Shielded  Order housings separately	21 03 381 2820	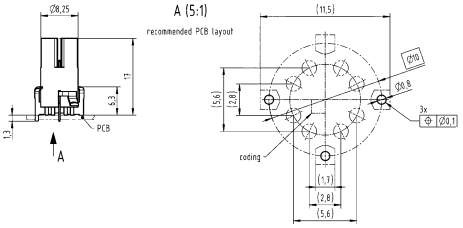
Circular connectors M12, PCB adapter, Straight, Reflow soldering termination (SMT), Shielded, Pack contents: 75 pieces on reel  Order housings separately	21 03 381 2821	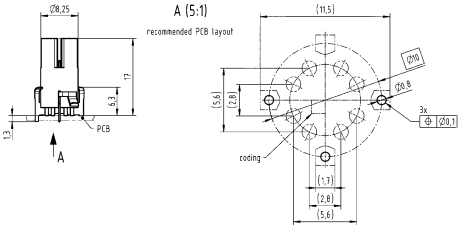
Circular connectors M12, Housing, for front mounting, M14 x 1, 9 mm  If necessary, order lock nut 21 41 000 0011 separately.	21 41 000 0010	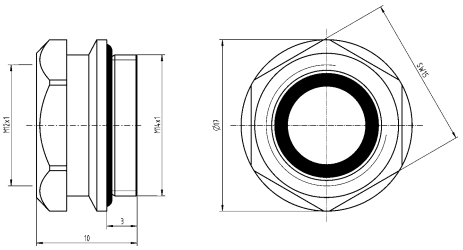

Identification	Part number Female	Drawing (dimensions in mm)
Circular connectors M12, Housing, for front mounting, M14 x 1, 13 mm  If necessary, order lock nut 21 41 000 0011 separately.	21 41 000 0013	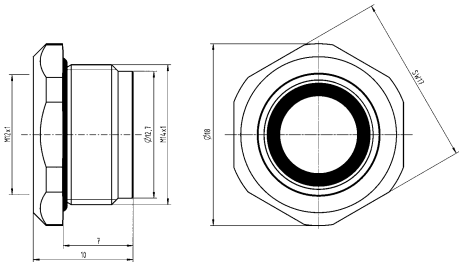

M12

Number of contacts

4+ ⏚

Reflow soldering termination (THR)
Shielded

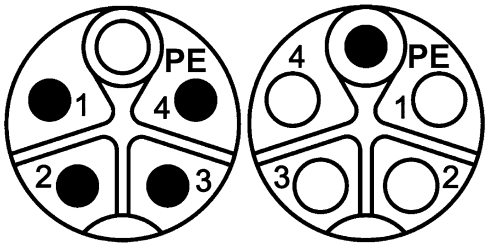

Technical characteristics

Number of contacts	4
Rated current	12 A
Rated voltage	630 V
Rated impulse voltage	6 kV
Pollution degree	3
Insulation resistance	>10^8 Ω
Contact resistance	≤10 mΩ
Mating cycles	≥100
Locking type	Screw locking, PushPull
Degree of protection acc. to IEC 60529	IP65 / IP67, when mated

Technical characteristics

Tightening torque	2 Nm Lock nut
Material (insert)	Liquid crystal polymer (LCP)
Material (contacts)	Copper alloy
Surface (contacts)	Gold plated

Specifications and approvals

IEC 61076-2-111

Identification	Part number Male	Part number Female	Drawing (dimensions in mm)
Circular connectors M12, Power, PushPull, PCB adapter, Straight, Reflow soldering termination (THR), Shielded, Pack contents: 30 pieces in a carton box  Order housings separately	21 03 309 1505 407	21 03 309 2505 407	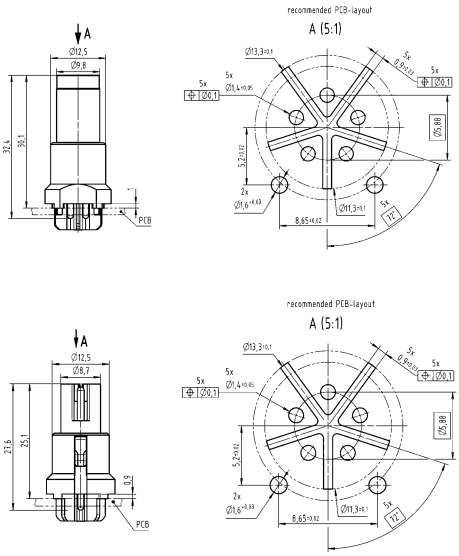
Circular connectors M12, Power, PushPull, PCB adapter, Straight, Reflow soldering termination (THR), Shielded, Pack contents: 60 pieces in a tray  Order housings separately	21 03 309 1505	21 03 309 2505	

Identification	Part number Male	Part number Female	Drawing (dimensions in mm)
Circular connectors M12, Housing, for rear mounting, Pack contents: 30 pieces	21 03 302 1000 407	21 03 302 2000 407	
Circular connectors M12, Housing, for front mounting, Pack contents: 30 pieces 	21 03 302 1001 407	21 03 302 2001 407	

M12

Number of contacts

4+ ⏚

Reflow soldering termination (THR)
Shielded

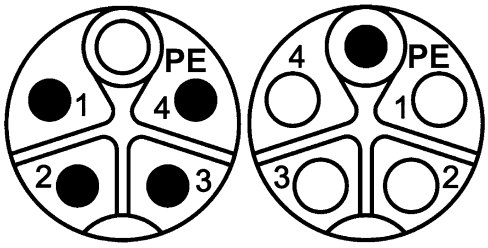

Technical characteristics

Number of contacts	4
Rated current	12 A
Rated voltage	630 V
Rated impulse voltage	6 kV
Pollution degree	3
Insulation resistance	>10^8 Ω
Contact resistance	≤10 mΩ
Mating cycles	≥100
Locking type	Screw locking, PushPull
Degree of protection acc. to IEC 60529	IP65 / IP67, when mated

Technical characteristics

Tightening torque	2 Nm Lock nut
Material (insert)	Liquid crystal polymer (LCP)
Material (contacts)	Copper alloy
Surface (contacts)	Gold plated

Specifications and approvals

IEC 61076-2-111

Identification	Part number Male	Part number Female	Drawing (dimensions in mm)
Circular connectors M12, Power, PCB adapter, Straight, incl. housing, for rear mounting, Reflow soldering termination (THR), Shielded 	21 03 309 1530	21 03 309 2530	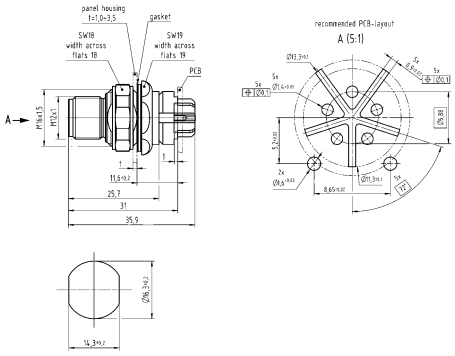 Panel cut out 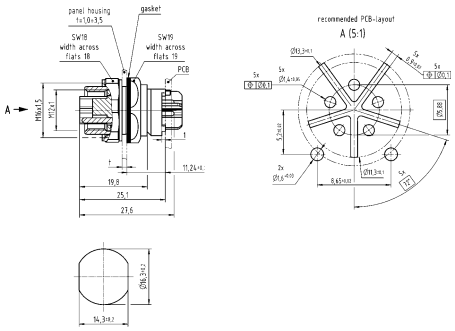 Panel cut out

Identification	Part number Male	Part number Female	Drawing (dimensions in mm)
Circular connectors M12, Power, PushPull, PCB adapter, Straight, incl. housing, for front mounting, Reflow soldering termination (THR), Shielded 	21 03 309 1531	21 03 309 2531	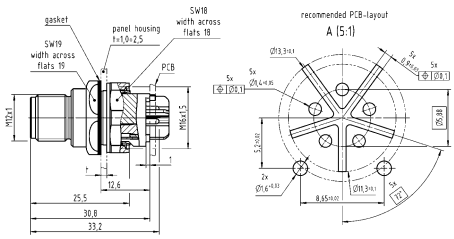 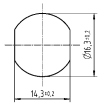 Panel cut out 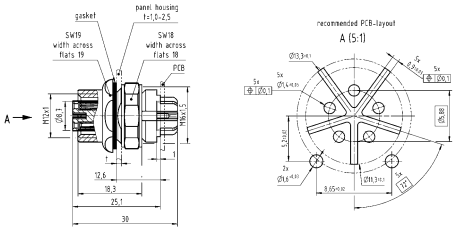  Panel cut out

M12

Number of contacts

4

Reflow soldering termination (THR)
Shielded

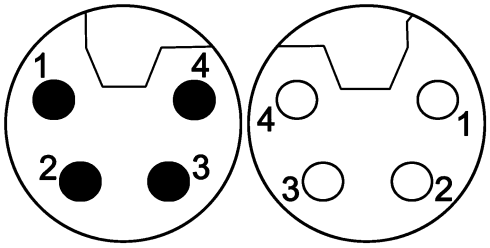

Technical characteristics

Number of contacts	4
Rated current	16 A
Rated voltage	63 V
Rated impulse voltage	1.5 kV
Pollution degree	3
Insulation resistance	>10^8 Ω
Contact resistance	≤10 mΩ
Mating cycles	≥100
Locking type	Screw locking
Degree of protection acc. to IEC 60529	IP65 / IP67, when mated
Tightening torque	2 Nm Lock nut
Material (insert)	Polyamide (PA)

Technical characteristics

Colour (insert)	Black
Material (contacts)	Copper alloy
Surface (contacts)	Gold plated
RoHS	compliant, compliant with exemption

Specifications and approvals

IEC 61076-2-111

Identification	Part number Male	Part number Female	Drawing (dimensions in mm)
Circular connectors M12, Power, PCB adapter, Straight, Reflow soldering termination (THR), Shielded, Pack contents: 60 pieces in a tray  Order housings separately	21 03 396 1506	21 03 396 2506	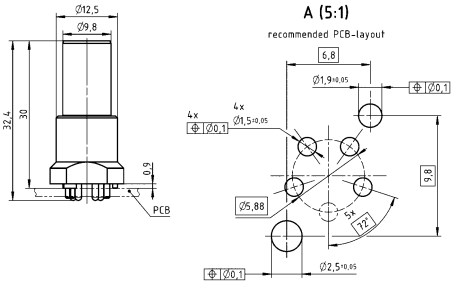 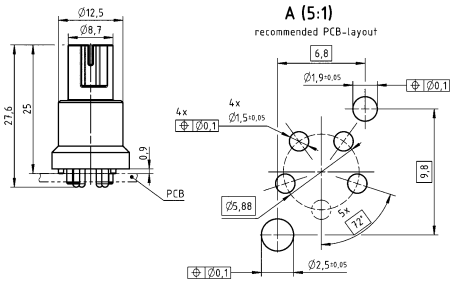

Identification	Part number Male	Part number Female	Drawing (dimensions in mm)
Circular connectors M12, Housing, for rear mounting, Pack contents: 60 pieces 	21 03 302 1000	21 03 302 2000	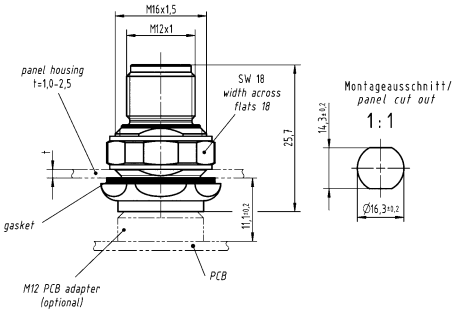 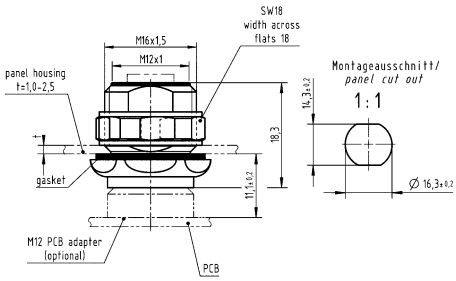
Circular connectors M12, Housing, for front mounting, Pack contents: 60 pieces 	21 03 302 1001	21 03 302 2001	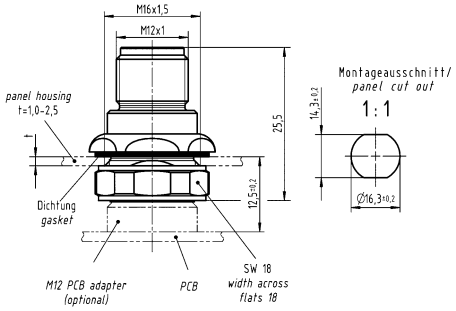 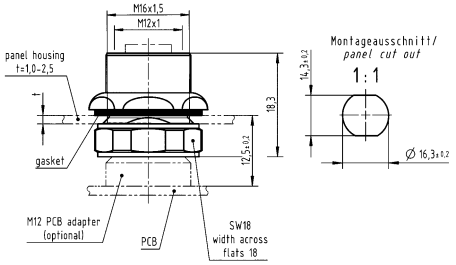

M12

Number of contacts

4

Reflow soldering termination (THR)
Shielded

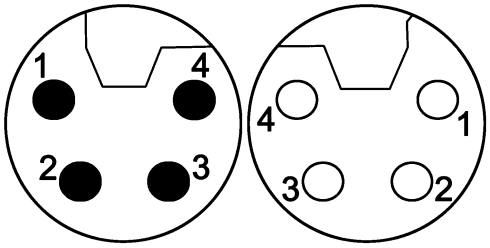

Technical characteristics

Number of contacts	4
Rated current	16 A
Rated voltage	63 V
Rated impulse voltage	1.5 kV
Pollution degree	3
Insulation resistance	>10^8 Ω
Contact resistance	≤10 mΩ
Mating cycles	≥100
Locking type	Screw locking
Degree of protection acc. to IEC 60529	IP65 / IP67, when mated
Tightening torque	2 Nm Lock nut
Material (insert)	Polyamide (PA)

Technical characteristics

Colour (insert)	Black
Material (hood/housing)	Zinc die-cast
Material (contacts)	Copper alloy
Surface (contacts)	Gold plated
RoHS	compliant

Specifications and approvals

IEC 61076-2-111

Identification	Part number Male	Part number Female	Drawing (dimensions in mm)
Circular connectors M12, Power, PCB adapter, Straight, incl. housing, for front mounting, Reflow soldering termination (THR), Shielded 	21 03 396 1532	21 03 396 2532	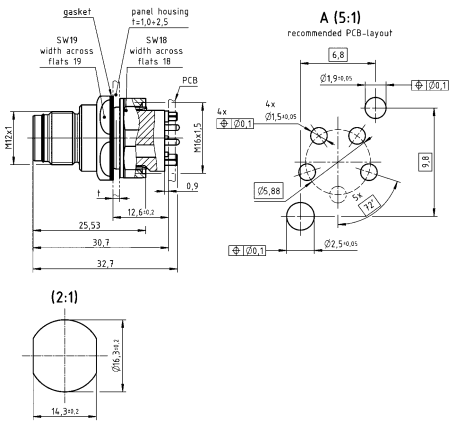 Panel cut out 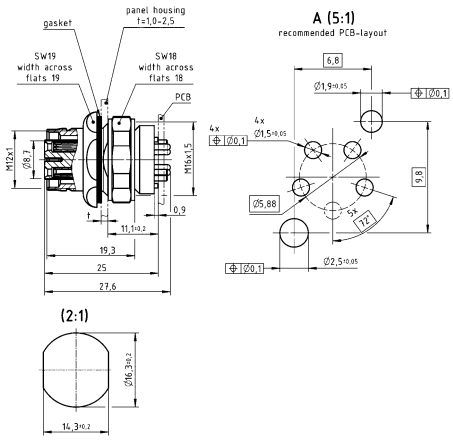 Panel cut out

Identification	Part number Male	Part number Female	Drawing (dimensions in mm)
Circular connectors M12, Power, PCB adapter, Straight, incl. housing, for rear mounting, Reflow soldering termination (THR), Shielded 	21 03 396 1533	21 03 396 2533	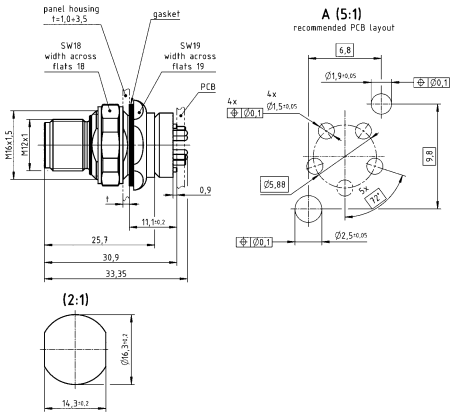 Panel cut out 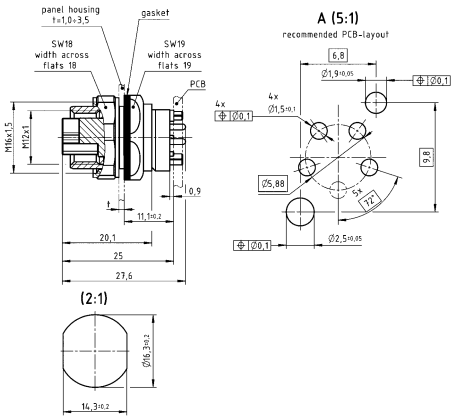 Panel cut out

M12

Number of contacts

4+

Reflow soldering termination (THR)
Shielded

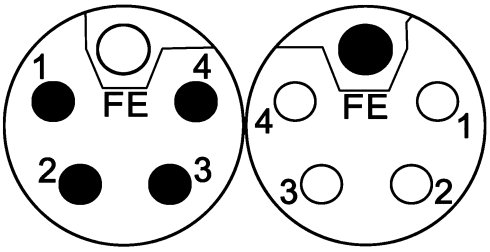

Technical characteristics

Number of contacts	4
Rated current	16 A
Rated voltage	63 V
Rated impulse voltage	1.5 kV
Pollution degree	3
Insulation resistance	>10^8 Ω
Contact resistance	≤10 mΩ
Mating cycles	≥100
Locking type	Screw locking
Degree of protection acc. to IEC 60529	IP65 / IP67, when mated
Tightening torque	2 Nm Lock nut
Material (insert)	Polyamide (PA)

Technical characteristics

Colour (insert)	Grey
Material (contacts)	Copper alloy
Surface (contacts)	Gold plated
RoHS	compliant with exemption

Specifications and approvals

IEC 61076-2-111

Identification	Part number Male	Part number Female	Drawing (dimensions in mm)
Circular connectors M12, Power, PCB adapter, Straight, Reflow soldering termination (THR), Shielded, Pack contents: 60 pieces in a tray  Order housings separately	21 03 396 1505	21 03 396 2505	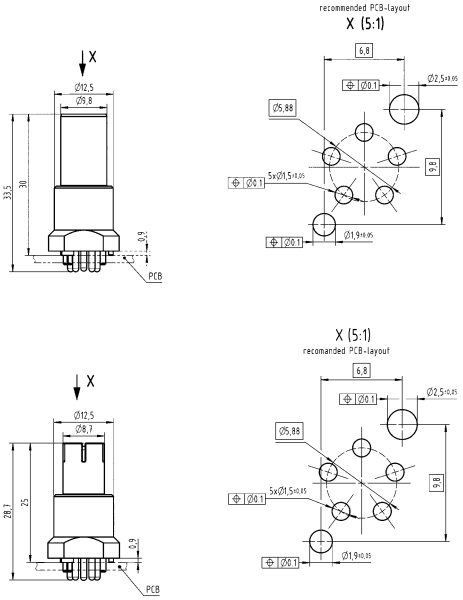

Identification	Part number Male	Part number Female	Drawing (dimensions in mm)
Circular connectors M12, Housing, for rear mounting, Pack contents: 60 pieces 	21 03 302 1000	21 03 302 2000	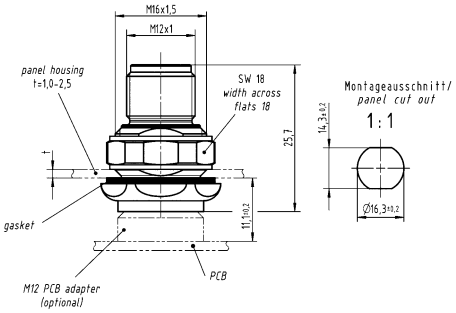 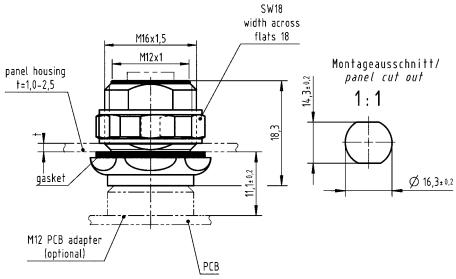
Circular connectors M12, Housing, for front mounting, Pack contents: 60 pieces 	21 03 302 1001	21 03 302 2001	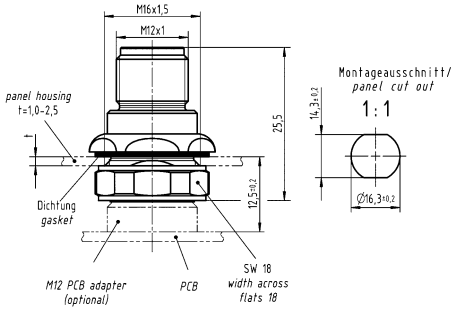 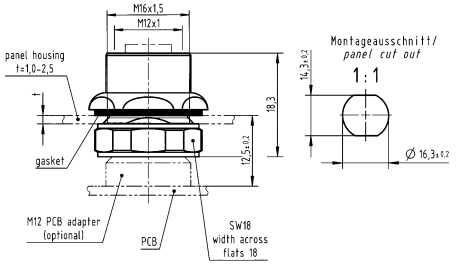

M12

Number of contacts

4+

Reflow soldering termination (THR)
Shielded

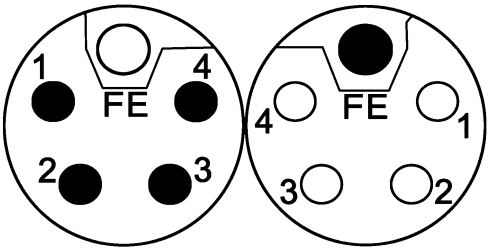

Technical characteristics

Number of contacts	4
Rated current	16 A
Rated voltage	63 V
Rated impulse voltage	1.5 kV
Pollution degree	3
Insulation resistance	>10^8 Ω
Contact resistance	≤10 mΩ
Mating cycles	≥100
Locking type	Screw locking
Degree of protection acc. to IEC 60529	IP65 / IP67, when mated
Tightening torque	2 Nm Lock nut
Material (insert)	Polyamide (PA)

Technical characteristics

Colour (insert)	Grey
Material (hood/housing)	Zinc die-cast
Material (contacts)	Copper alloy
Surface (contacts)	Gold plated
RoHS	compliant with exemption

Specifications and approvals

IEC 61076-2-111

Identification	Part number Male	Part number Female	Drawing (dimensions in mm)
Circular connectors M12, Power, PCB adapter, Straight, incl. housing, for rear mounting, Reflow soldering termination (THR), Shielded	21 03 396 1530	21 03 396 2530	

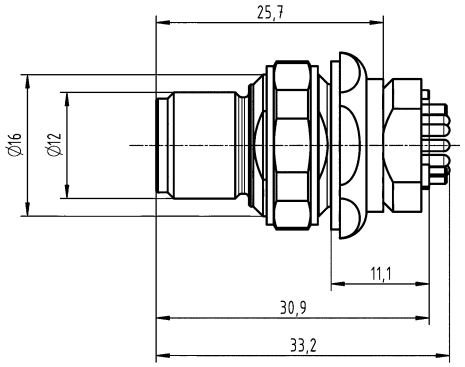

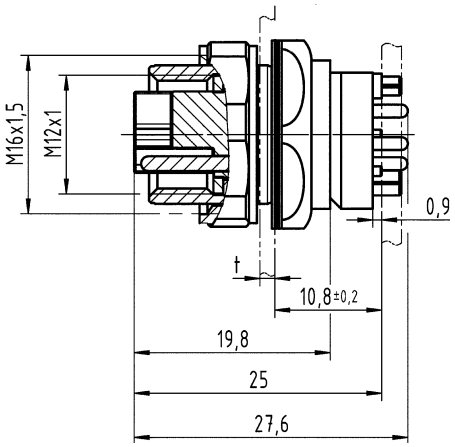

Identification	Part number Male	Part number Female	Drawing (dimensions in mm)
Circular connectors M12, Power, PCB adapter, Straight, incl. housing, for front mounting, Reflow soldering termination (THR), Shielded 	21 03 396 1531	21 03 396 2531	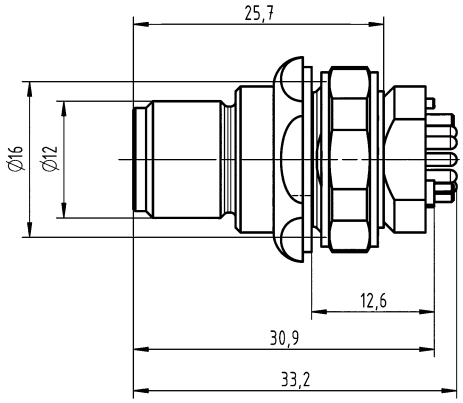 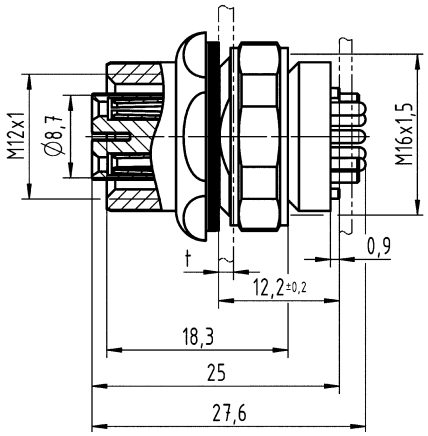

M12

Number of contacts

3+ ⏚

Reflow soldering termination (THR)
Shielded

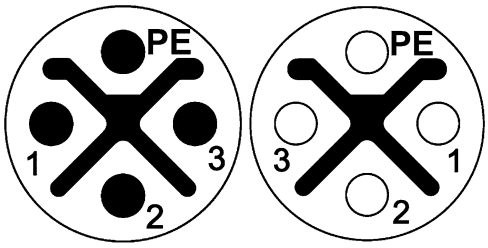

Technical characteristics

Number of contacts	3
Rated current	12 A
Rated voltage	630 V
Rated impulse voltage	6 kV
Pollution degree	3
Insulation resistance	>10^8 Ω
Contact resistance	≤10 mΩ
Mating cycles	≥100
Locking type	Screw locking, PushPull
Degree of protection acc. to IEC 60529	IP65 / IP67, when mated

Technical characteristics

Tightening torque	2 Nm Lock nut
Material (insert)	Liquid crystal polymer (LCP)
Material (contacts)	Copper alloy
Surface (contacts)	Gold plated

Specifications and approvals

IEC 61076-2-111

Identification	Part number Male	Part number Female	Drawing (dimensions in mm)
Circular connectors M12, Power, PushPull, PCB adapter, Straight, Reflow soldering termination (THR), Shielded, Pack contents: 30 pieces in a carton box  Order housings separately	21 03 399 1430	21 03 399 2430	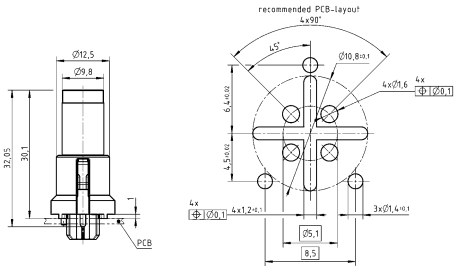 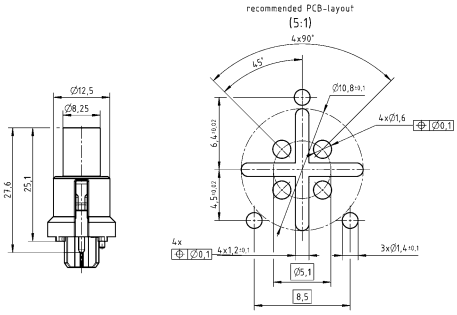
Circular connectors M12, Power, PushPull, PCB adapter, Straight, Reflow soldering termination (THR), Shielded, Pack contents: 60 pieces in a tray Order housings separately	21 03 399 1460	21 03 399 2460	
Circular connectors M12, Housing, for rear mounting, Pack contents: 30 pieces	21 03 302 1000 407	21 03 302 2000 407	

Identification	Part number Male	Part number Female	Drawing (dimensions in mm)
Circular connectors M12, Housing, for front mounting, Pack contents: 30 pieces 	21 03 302 1001 407	21 03 302 2001 407	

M12

Number of contacts

3+ ⏚

Reflow soldering termination (THR)
Shielded

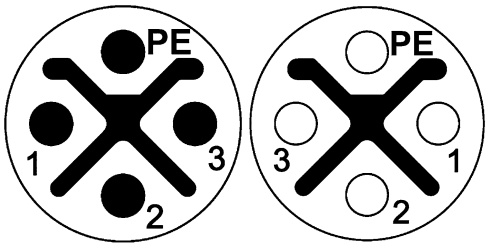

Technical characteristics

Number of contacts	3
Rated current	12 A
Rated voltage	630 V
Rated impulse voltage	6 kV
Pollution degree	3
Insulation resistance	>10^8 Ω
Contact resistance	≤10 mΩ
Mating cycles	≥100
Locking type	Screw locking
Degree of protection acc. to IEC 60529	IP65 / IP67, when mated

Technical characteristics

Tightening torque	2 Nm Lock nut
Material (insert)	Liquid crystal polymer (LCP)
Material (contacts)	Copper alloy
Surface (contacts)	Gold plated

Specifications and approvals

IEC 61076-2-111

Identification	Part number Male	Part number Female	Drawing (dimensions in mm)
Circular connectors M12, Power, PCB adapter, Straight, Reflow soldering termination (THR), Shielded, Pack contents: incl. housing 	21 03 399 1403	21 03 399 2403	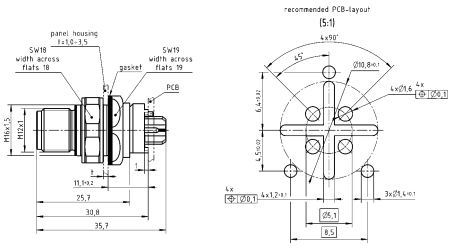  Panel cut out 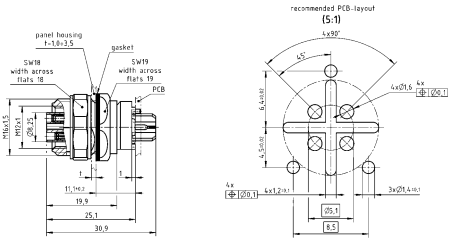  Panel cut out

Number of contacts

4

Reflow soldering termination (SMT)
Shielded

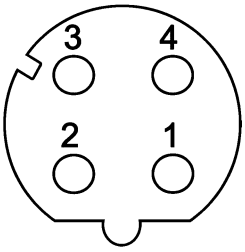

Technical characteristics

Number of contacts	4
Rated current	3 A
Rated voltage	57 V
Rated impulse voltage	1.5 kV
Pollution degree	3
Insulation resistance	>10^8 Ω
Contact resistance	≤10 mΩ
Mating cycles	≥100
Locking type	Screw locking, PushPull
Degree of protection acc. to IEC 60529	IP65 / IP67, when mated
Transmission characteristics	Cat. 5, Class D up to 100 MHz

Technical characteristics

Data rate	100 Mbit/s
Tightening torque	2 Nm Lock nut
Material (insert)	Liquid crystal polymer (LCP)
Material (contacts)	Brass
Surface (contacts)	Gold plated
Material (accessories)	Brass, nickel plated
RoHS	compliant with exemption

Specifications and approvals

IEC 61076-2-101

Identification	Part number Female	Drawing (dimensions in mm)
Circular connectors M12, Magnetics, PCB adapter, with integrated transformer, Straight, Reflow soldering termination (SMT), Shielded, Pack contents: 60 pieces in a tray  Order housings separately	21 03 381 2410	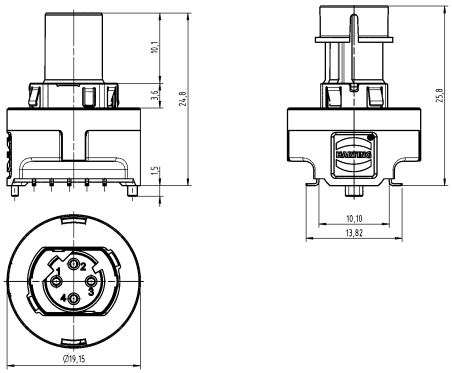
Circular connectors M12, Magnetics, PCB adapter, with integrated transformer, Straight, Power over Ethernet (PoE+), Reflow soldering termination (SMT), Shielded, Pack contents: 60 pieces in a tray  Order housings separately	21 03 381 2411	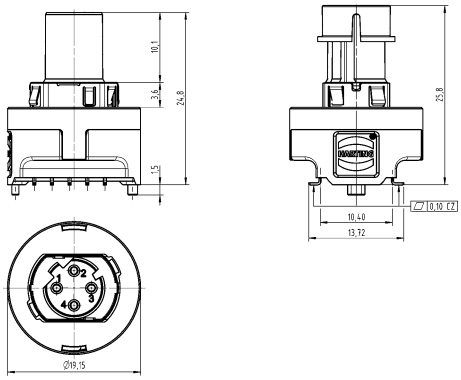

M12

Identification	Part number Female	Drawing (dimensions in mm)
Circular connectors M12, Magnetics, PCB adapter, with integrated transformer, Angled, Reflow soldering termination (SMT), Shielded, Pack contents: 30 pieces in a tray  Order housings separately	21 03 381 4420	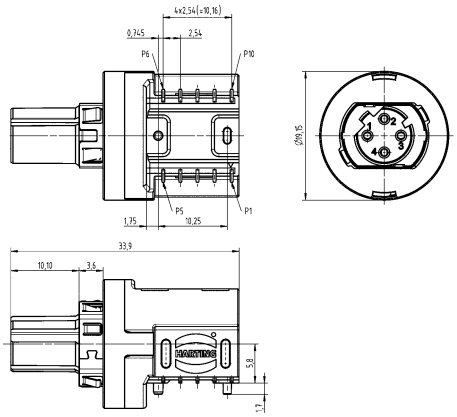
Circular connectors M12, Magnetics, PCB adapter, with integrated transformer, Angled, Power over Ethernet (PoE+), Reflow soldering termination (SMT), Shielded, Pack contents: 30 pieces in a tray  Order housings separately	21 03 381 4421	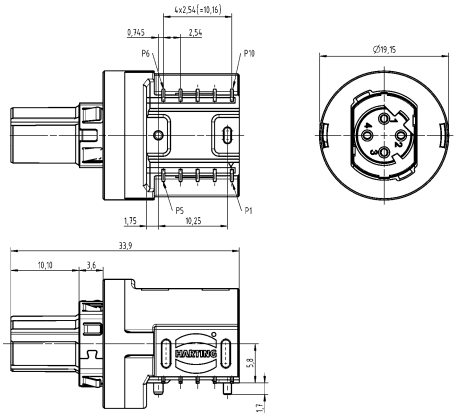
Circular connectors M12, PushPull, Housing, for front mounting, Pack contents: 30 pieces 	21 03 301 2006	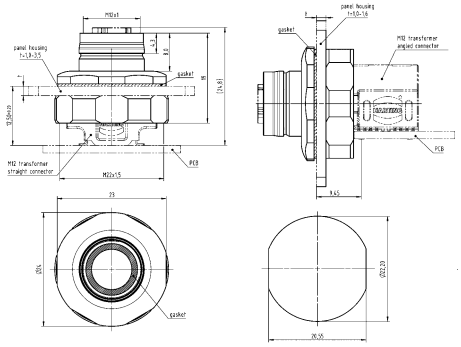 Panel cut out

Identification	Part number Female	Drawing (dimensions in mm)
Circular connectors M12, Housing, for rear mounting, Pack contents: 30 pieces 	21 03 301 2007	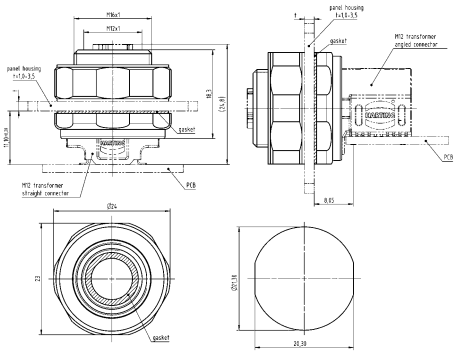 Panel cut out

M12

Number of contacts

4

Reflow soldering termination (SMT)
Shielded

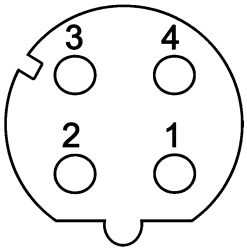

Technical characteristics

Number of contacts	4
Rated current	3 A
Rated voltage	57 V
Rated impulse voltage	1.5 kV
Pollution degree	3
Insulation resistance	>10^8 Ω
Contact resistance	≤10 mΩ
Mating cycles	≥100
Locking type	Screw locking, PushPull
Degree of protection acc. to IEC 60529	IP65 / IP67, when mated
Transmission characteristics	Cat. 5, Class D up to 100 MHz

Technical characteristics

Data rate	100 Mbit/s
Tightening torque	2 Nm Lock nut
Material (insert)	Liquid crystal polymer (LCP)
Material (contacts)	Brass
Surface (contacts)	Gold plated
RoHS	compliant with exemption

Specifications and approvals

IEC 61076-2-101

Identification	Part number Female	Drawing (dimensions in mm)
Circular connectors M12, Magnetics, PushPull, PCB adapter, with integrated transformer, Straight, incl. housing, Power over Ethernet (PoE+), for front mounting, Reflow soldering termination (SMT), Shielded 	21 03 381 2421	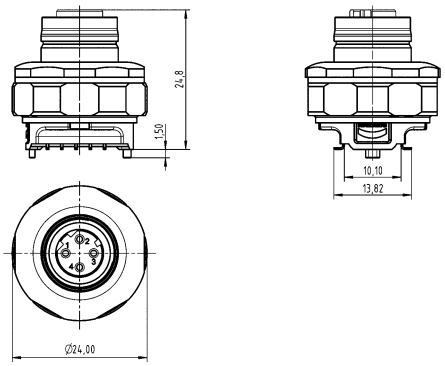
Circular connectors M12, Magnetics, PushPull, PCB adapter, with integrated transformer, Angled, incl. housing, Power over Ethernet (PoE+), for front mounting, Reflow soldering termination (SMT), Shielded 	21 03 381 4422	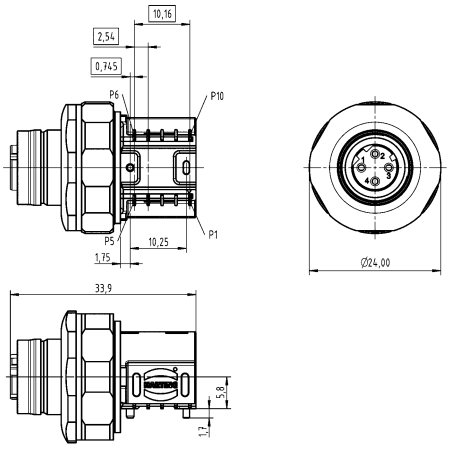

Number of contacts

8

Reflow soldering termination (SMT)
Shielded

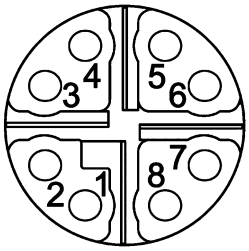

Technical characteristics

Number of contacts	8
Rated current	0.8 A
Rated voltage	57 V
Rated impulse voltage	1.5 kV
Pollution degree	3
Insulation resistance	>10^8 Ω
Contact resistance	≤10 mΩ
Mating cycles	≥100
Locking type	Screw locking, PushPull
Degree of protection acc. to IEC 60529	IP65 / IP67, when mated
Transmission characteristics	Cat. 6_A, Class E_A up to 500 MHz

Technical characteristics

Data rate	1 Gbit/s
Tightening torque	2 Nm Lock nut
Material (insert)	Liquid crystal polymer (LCP)
Material (contacts)	Brass
Surface (contacts)	Gold plated
Material (accessories)	Brass, nickel plated
RoHS	compliant with exemption

Specifications and approvals

IEC 61076-2-109

Identification	Part number Female	Drawing (dimensions in mm)
Circular connectors M12, Magnetics, PCB adapter, with integrated transformer, Straight, Reflow soldering termination (SMT), Shielded, Pack contents: 60 pieces in a tray  Order housings separately	21 03 381 2815	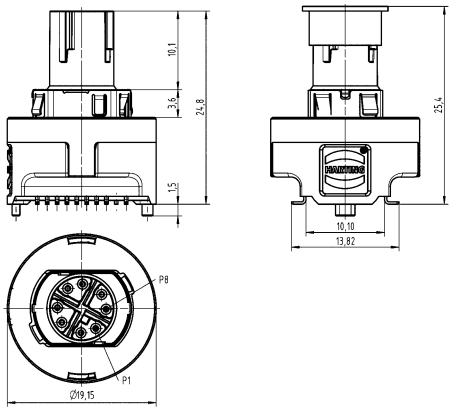
Circular connectors M12, Magnetics, PCB adapter, with integrated transformer, Straight, Power over Ethernet (PoE+), Reflow soldering termination (SMT), Shielded, Pack contents: 60 pieces in a tray  Order housings separately	21 03 381 2817	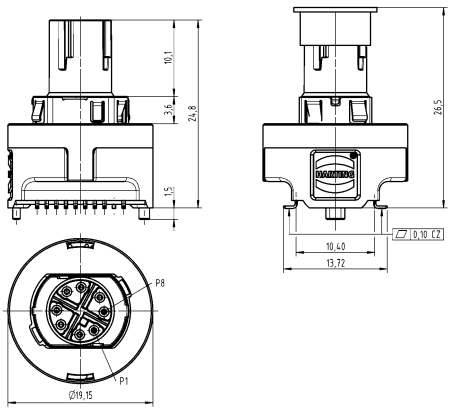

M12

Identification	Part number Female	Drawing (dimensions in mm)
Circular connectors M12, Magnetics, PCB adapter, with integrated transformer, Angled, Reflow soldering termination (SMT), Shielded, Pack contents: 30 pieces in a tray  Order housings separately	21 03 381 4820	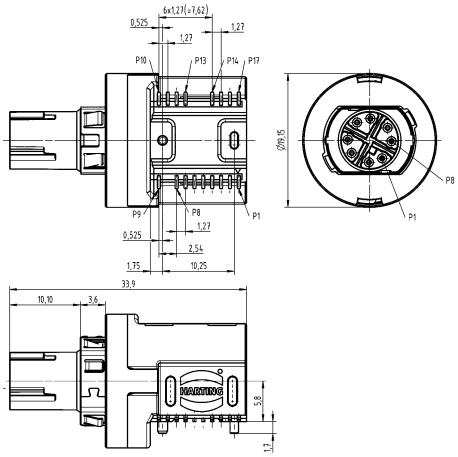
Circular connectors M12, Magnetics, PCB adapter, with integrated transformer, Angled, Power over Ethernet (PoE+), Reflow soldering termination (SMT), Shielded, Pack contents: 30 pieces in a tray  Order housings separately	21 03 381 4822	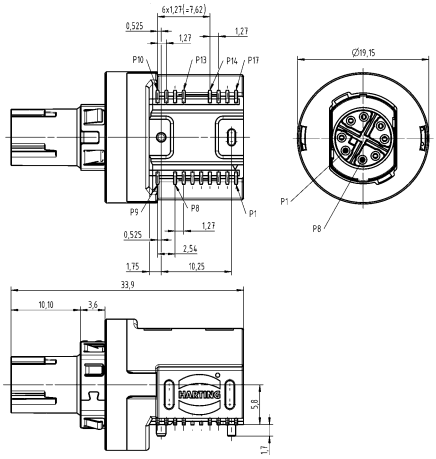
Circular connectors M12, PushPull, Housing, for front mounting, Pack contents: 30 pieces 	21 03 301 2006	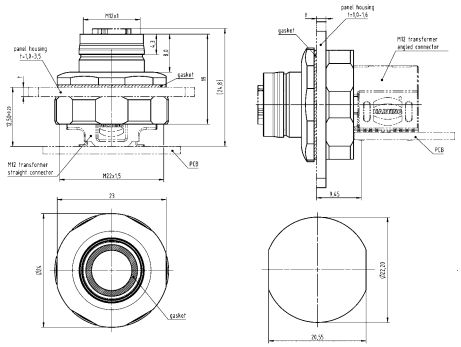 Panel cut out

Identification	Part number Female	Drawing (dimensions in mm)
Circular connectors M12, Housing, for rear mounting, Pack contents: 30 pieces 	21 03 301 2007	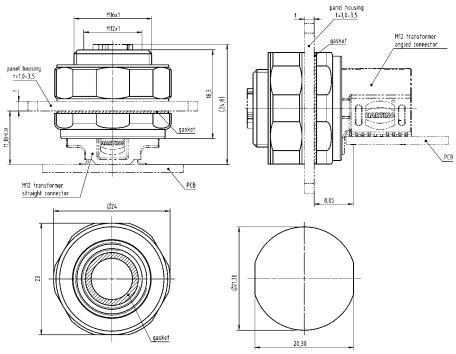 Panel cut out

M12

Number of contacts

8

Reflow soldering termination (SMT)
Shielded

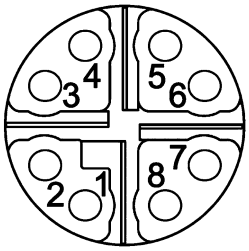

Technical characteristics

Number of contacts	8
Rated current	0.8 A
Rated voltage	57 V
Rated impulse voltage	1.5 kV
Pollution degree	3
Insulation resistance	>10^8 Ω
Contact resistance	≤10 mΩ
Mating cycles	≥100
Locking type	Screw locking, PushPull
Degree of protection acc. to IEC 60529	IP65 / IP67, when mated
Transmission characteristics	Cat. 6_A, Class E_A up to 500 MHz

Technical characteristics

Data rate	1 Gbit/s
Tightening torque	2 Nm Lock nut
Material (insert)	Liquid crystal polymer (LCP)
Material (contacts)	Brass
Surface (contacts)	Gold plated
RoHS	compliant with exemption

Specifications and approvals

IEC 61076-2-109

Identification	Part number Female	Drawing (dimensions in mm)
Circular connectors M12, Magnetics, PushPull, PCB adapter, with integrated transformer, Straight, incl. housing, Power over Ethernet (PoE+), for front mounting, Reflow soldering termination (SMT), Shielded 	21 03 381 2824	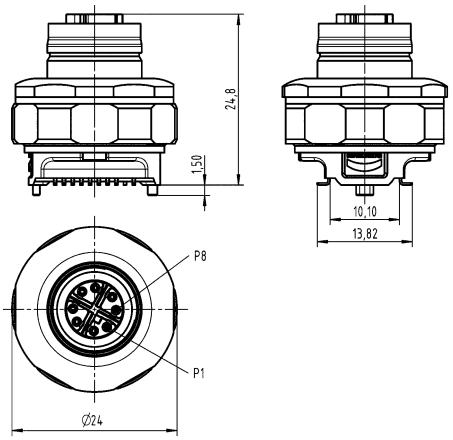
Circular connectors M12, Magnetics, PushPull, PCB adapter, with integrated transformer, Angled, incl. housing, Power over Ethernet (PoE+), for front mounting, Reflow soldering termination (SMT), Shielded 	21 03 381 4826	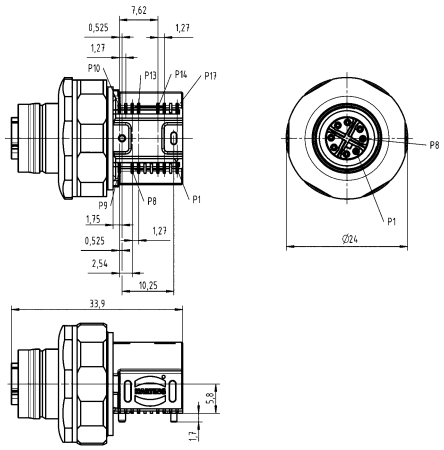

Number of contacts

8

Reflow soldering termination (SMT)
Shielded

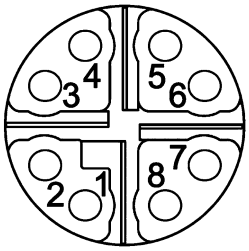

Technical characteristics

Number of contacts	8
Rated current	0.8 A
Rated voltage	57 V
Rated impulse voltage	1.5 kV
Pollution degree	3
Insulation resistance	>10^8 Ω
Contact resistance	≤10 mΩ
Mating cycles	≥100
Locking type	Screw locking, PushPull
Degree of protection acc. to IEC 60529	IP65 / IP67, when mated
Transmission characteristics	Cat. 6_A, Class E_A up to 500 MHz

Technical characteristics

Data rate	10 Gbit/s
Tightening torque	2 Nm Lock nut
Material (insert)	Liquid crystal polymer (LCP)
Material (contacts)	Brass
Surface (contacts)	Gold plated
Material (accessories)	Brass, nickel plated
RoHS	compliant with exemption

Specifications and approvals

IEC 61076-2-109

Identification	Part number Female	Drawing (dimensions in mm)
Circular connectors M12, Magnetics, PCB adapter, with integrated transformer, Straight, Reflow soldering termination (SMT), Shielded, Pack contents: 60 pieces in a tray  Order housings separately	21 03 381 2818	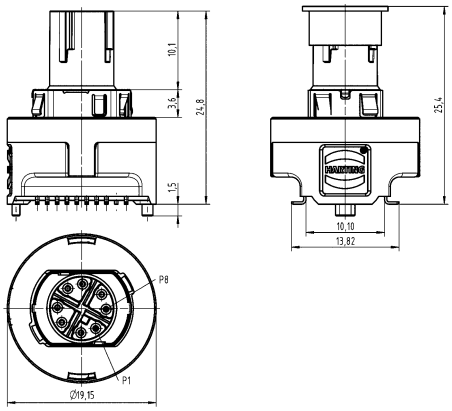
Circular connectors M12, Magnetics, PCB adapter, with integrated transformer, Straight, Power over Ethernet (PoE+), Reflow soldering termination (SMT), Shielded, Pack contents: 60 pieces in a tray  Order housings separately	21 03 381 2823	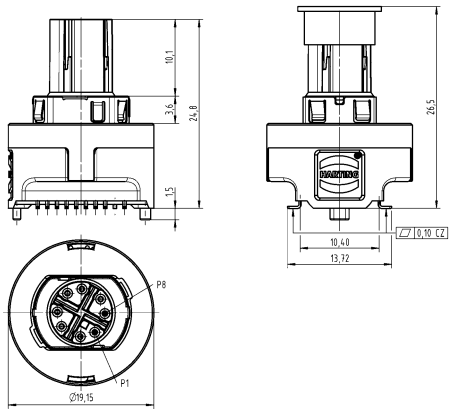

M12

Identification	Part number Female	Drawing (dimensions in mm)
Circular connectors M12, Magnetics, PCB adapter, with integrated transformer, Angled, Reflow soldering termination (SMT), Shielded, Pack contents: 30 pieces in a tray  Order housings separately	21 03 381 4823	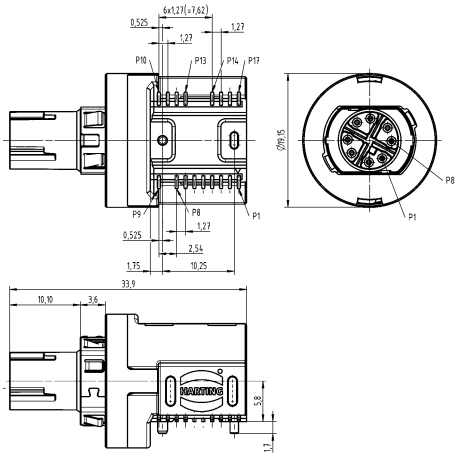
Circular connectors M12, Magnetics, PCB adapter, with integrated transformer, Angled, Power over Ethernet (PoE+), Reflow soldering termination (SMT), Shielded, Pack contents: 30 pieces in a tray  Order housings separately	21 03 381 4825	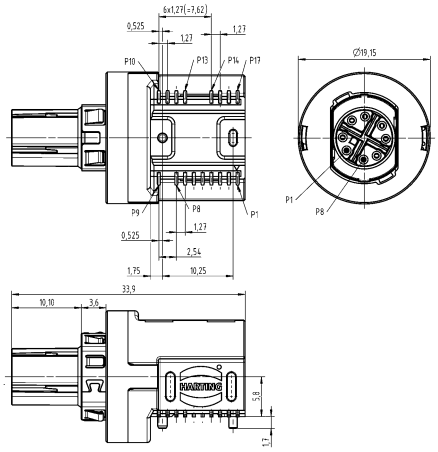
Circular connectors M12, PushPull, Housing, for front mounting, Pack contents: 30 pieces 	21 03 301 2006	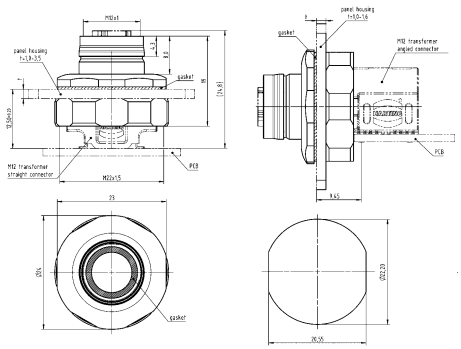 Panel cut out

Identification	Part number Female	Drawing (dimensions in mm)
Circular connectors M12, Housing, for rear mounting, Pack contents: 30 pieces 	21 03 301 2007	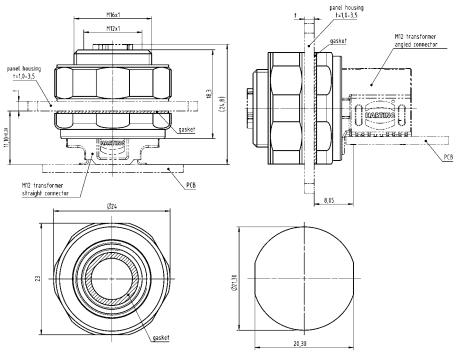 Panel cut out

M12

Number of contacts

8

Reflow soldering termination (SMT)
Shielded

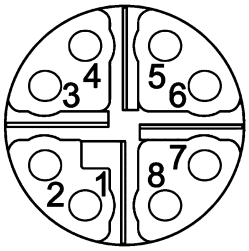

Technical characteristics

Number of contacts	8
Rated current	0.8 A
Rated voltage	57 V
Rated impulse voltage	1.5 kV
Pollution degree	3
Insulation resistance	>10^8 Ω
Contact resistance	≤10 mΩ
Mating cycles	≥100
Locking type	Screw locking, PushPull
Degree of protection acc. to IEC 60529	IP65 / IP67, when mated
Transmission characteristics	Cat. 6_A, Class E_A up to 500 MHz

Technical characteristics

Data rate	10 Gbit/s
Tightening torque	2 Nm Lock nut
Material (insert)	Liquid crystal polymer (LCP)
Material (contacts)	Brass
Surface (contacts)	Gold plated
RoHS	compliant with exemption

Specifications and approvals

IEC 61076-2-109

Identification	Part number Female	Drawing (dimensions in mm)
Circular connectors M12, Magnetics, PushPull, PCB adapter, with integrated transformer, Straight, incl. housing, Power over Ethernet (PoE+), for front mounting, Reflow soldering termination (SMT), Shielded 	21 03 381 2825	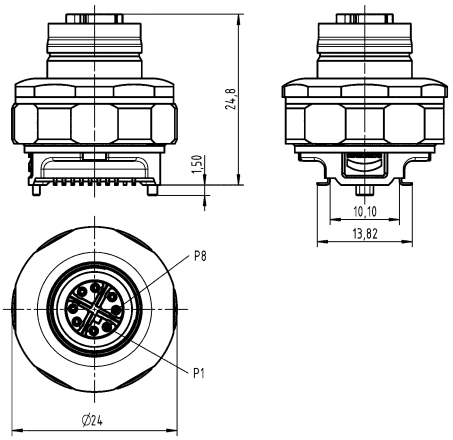
Circular connectors M12, Magnetics, PushPull, PCB adapter, with integrated transformer, Angled, incl. housing, Power over Ethernet (PoE+), for front mounting, Reflow soldering termination (SMT), Shielded 	21 03 381 4827	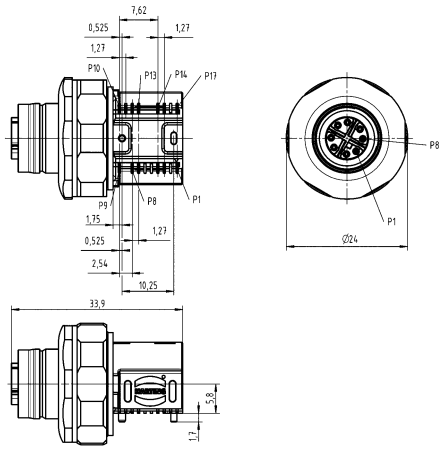

Panel feed through

A-coding

Number of contacts

3

Unshielded

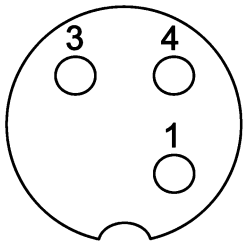

M12

Technical characteristics

Number of contacts	3
Rated current	4 A
Rated voltage	250 V
Rated impulse voltage	1.5 kV
Pollution degree	3
Insulation resistance	>10^8 Ω
Contact resistance	≤10 mΩ
Mating cycles	≥100
Locking type	Screw locking
Conductor length	50 cm
Degree of protection acc. to IEC 60529	IP67, when mated
Conductor cross-section	0.25 mm²
Conductor cross-section	AWG 24

Technical characteristics

Tightening torque	2 Nm Lock nut
Material (insert)	Polyamide (PA)
Material (hood/housing)	Zinc die-cast
Material (contacts)	Brass
Surface (contacts)	Gold plated
RoHS	compliant with exemption

Specifications and approvals

IEC 61076-2-101

CE

Identification	Conductor cross-section (mm²)	Part number Female	Drawing (dimensions in mm)
Circular connectors M12, Panel feed through, With conductors, for front mounting, Unshielded  without lock nut	0.25	21 03 317 6305	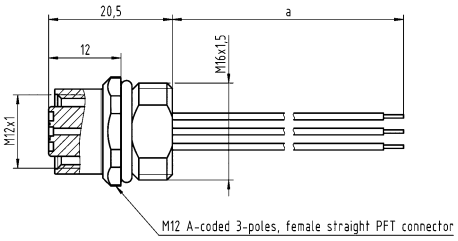

M12

Number of contacts

4

Unshielded

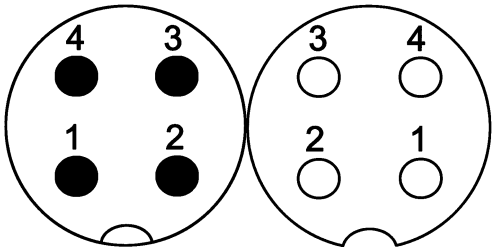

Technical characteristics

Number of contacts	4
Rated current	4 A
Rated voltage	250 V
Rated impulse voltage	1.5 kV
Pollution degree	3
Insulation resistance	>10^8 Ω
Contact resistance	≤10 mΩ
Mating cycles	≥100
Locking type	Screw locking
Conductor length	50 cm, 100 cm
Degree of protection acc. to IEC 60529	IP67, when mated
Conductor cross-section	0.5 mm², 0.25 mm²
Conductor cross-section	AWG 20, AWG 24
Tightening torque	2 Nm Lock nut

Technical characteristics

Material (insert)	Polyamide (PA)
Material (hood/housing)	Zinc die-cast
Material (contacts)	Brass
Surface (contacts)	Gold plated
RoHS	compliant with exemption

Specifications and approvals

IEC 61076-2-101
UL 1977 ECBT2.E102079
CSA-C22.2 No. 182.3 ECBT8.E102079

CE

Identification	Conductor cross-section (mm²)	Part number Male	Part number Female	Drawing (dimensions in mm)
Circular connectors M12, Panel feed through, With conductors, for front mounting, Unshielded, Pack contents: incl. lock nut 	0.5	21 03 311 1402	21 03 311 2400	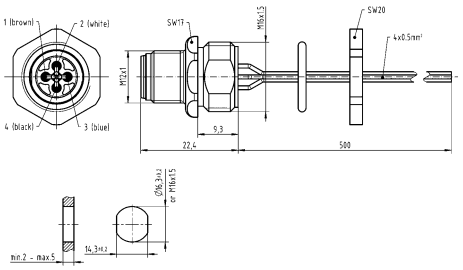 Panel cut out 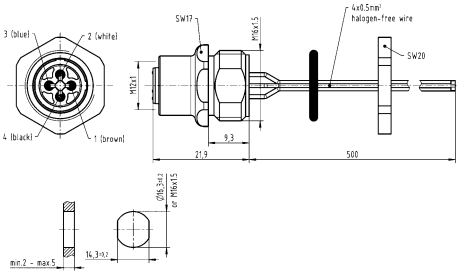 Panel cut out

Identification	Conductor cross-section (mm²)	Part number Male	Part number Female	Drawing (dimensions in mm)
Circular connectors M12, Panel feed through, With conductors, for front mounting, Unshielded without lock nut	0.25		21 03 317 6405 21 03 317 6410	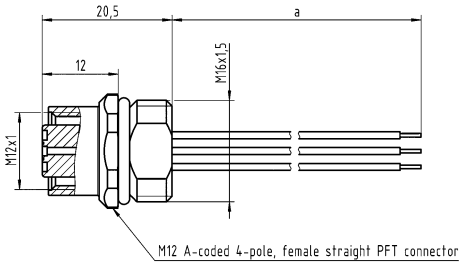 21 03 317 6405: a = 50 cm 21 03 317 6410: a = 100 cm

M12

Number of contacts

5

Unshielded

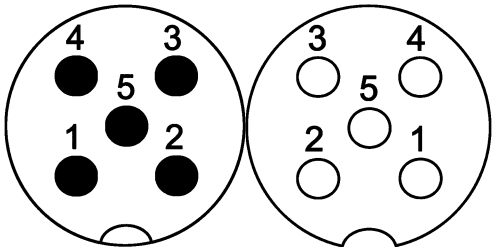

Technical characteristics

Number of contacts	5
Rated current	4 A
Rated voltage	60 V
Rated impulse voltage	1.5 kV
Pollution degree	3
Insulation resistance	>10^8 Ω
Contact resistance	≤10 mΩ
Mating cycles	≥100
Locking type	Screw locking
Conductor length	50 cm, 100 cm
Degree of protection acc. to IEC 60529	IP67, when mated
Conductor cross-section	0.5 mm², 0.25 mm²
Conductor cross-section	AWG 20, AWG 24
Tightening torque	2 Nm Lock nut

Technical characteristics

Material (insert)	Polyamide (PA)
Material (hood/housing)	Zinc die-cast
Material (contacts)	Brass
Surface (contacts)	Gold plated
RoHS	compliant with exemption

Specifications and approvals

IEC 61076-2-101
UL 1977 ECBT2.E102079
CSA-C22.2 No. 182.3 ECBT8.E102079

CE

Identification	Conductor cross-section (mm²)	Part number Male	Part number Female	Drawing (dimensions in mm)
Circular connectors M12, Panel feed through, With conductors, for front mounting, Unshielded, Pack contents: incl. lock nut 	0.5	21 03 311 1501	21 03 311 2501	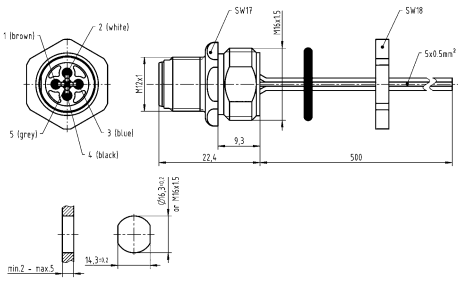 Panel cut out 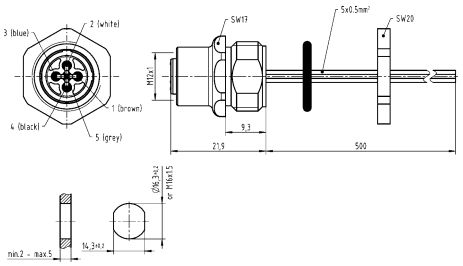 Panel cut out
Circular connectors M12, Panel feed through, With conductors, for front mounting, Unshielded without lock nut	0.25		21 03 317 6505 21 03 317 6510	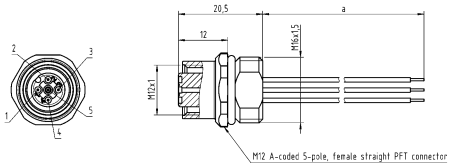 21 03 317 6505: a = 50 cm 21 03 317 6510: a = 100 cm

Number of contacts

8

Unshielded

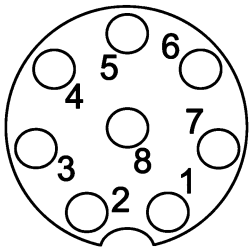

Technical characteristics

Number of contacts	8
Rated current	2 A
Rated voltage	30 V
Rated impulse voltage	1.5 kV
Pollution degree	3
Insulation resistance	>10^8 Ω
Contact resistance	≤10 mΩ
Mating cycles	≥100
Locking type	Screw locking
Conductor length	50 cm, 100 cm
Degree of protection acc. to IEC 60529	IP67, when mated
Conductor cross-section	0.25 mm²
Conductor cross-section	AWG 24

Technical characteristics

Tightening torque	2 Nm Lock nut
Material (insert)	Polyamide (PA)
Material (hood/housing)	Zinc die-cast
Material (contacts)	Brass
Surface (contacts)	Gold plated
RoHS	compliant with exemption

Specifications and approvals

IEC 61076-2-101

CE

Identification	Conductor cross-section (mm²)	Part number Female	Drawing (dimensions in mm)
Circular connectors M12, Panel feed through, With conductors, for front mounting, Unshielded  without lock nut	0.25 0.25	21 03 317 6805 21 03 317 6810	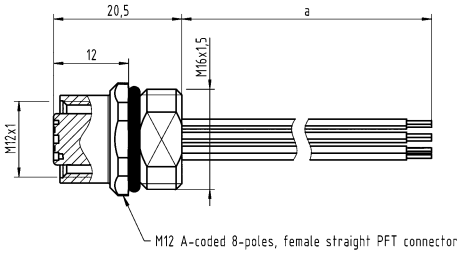 21 03 317 6805: a = 50 cm 21 03 317 6810: a = 100 cm

M12

Number of contacts

12

Unshielded

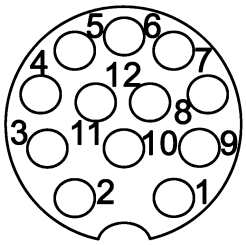

Technical characteristics

Number of contacts	12
Rated impulse voltage	1.5 kV
Pollution degree	3
Insulation resistance	>10^8 Ω
Contact resistance	≤10 mΩ
Mating cycles	≥100
Locking type	Screw locking
Conductor length	50 cm
Degree of protection acc. to IEC 60529	IP67, when mated
Conductor cross-section	0.13 mm²
Conductor cross-section	AWG 26
Tightening torque	2 Nm Lock nut

Technical characteristics

Material (insert)	Polyamide (PA)
Material (hood/housing)	Zinc die-cast
Material (contacts)	Brass
Surface (contacts)	Gold plated
RoHS	compliant with exemption

Specifications and approvals

IEC 61076-2-101

CE

Identification	Conductor cross-section (mm²)	Part number Female	Drawing (dimensions in mm)
Circular connectors M12, Panel feed through, With conductors, for front mounting, Unshielded  without lock nut	0.13	21 03 353 2C00	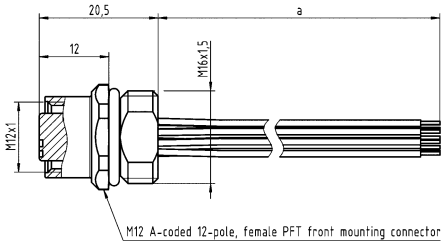 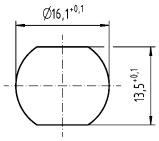 Panel cut out

Panel feed through

B-coding

Number of contacts

4

Unshielded

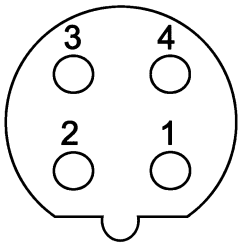

M12

Technical characteristics

Number of contacts	4
Rated current	4 A
Rated voltage	60 V
Rated impulse voltage	1.5 kV
Pollution degree	3
Insulation resistance	>10^8 Ω
Contact resistance	≤10 mΩ
Mating cycles	≥100
Locking type	Screw locking
Conductor length	50 cm
Degree of protection acc. to IEC 60529	IP67, when mated
Conductor cross-section	0.34 mm²

Technical characteristics

Conductor cross-section	AWG 22
Tightening torque	2 Nm Lock nut
Material (insert)	Polyamide (PA)
Material (hood/housing)	Zinc die-cast
Material (contacts)	Brass
Surface (contacts)	Gold plated
RoHS	compliant with exemption

Specifications and approvals

IEC 61076-2-101

Identification	Conductor cross-section (mm²)	Part number Female	Drawing (dimensions in mm)
Circular connectors M12, Panel feed through, With conductors, for front mounting, Unshielded  without lock nut	0.34	21 03 338 6405	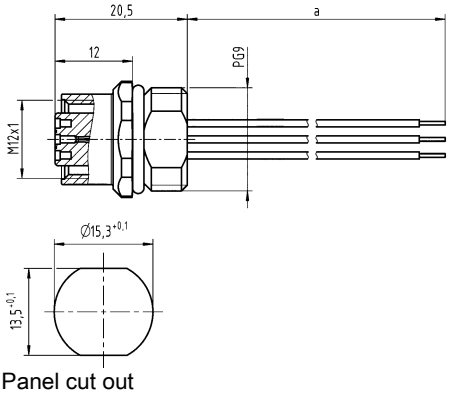 Panel cut out

M12

Number of contacts

5

Unshielded

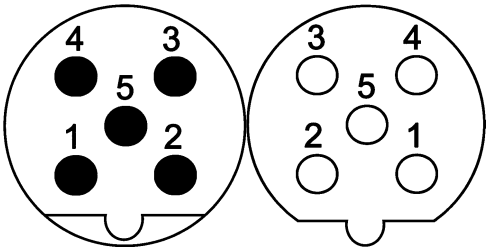

Technical characteristics

Number of contacts	5
Rated current	4 A
Rated voltage	60 V
Rated impulse voltage	1.5 kV
Pollution degree	3
Insulation resistance	>10^8 Ω
Contact resistance	≤10 mΩ
Mating cycles	≥100
Locking type	Screw locking
Conductor length	20 cm
Degree of protection acc. to IEC 60529	IP67, when mated
Conductor cross-section	0.34 mm²
Conductor cross-section	AWG 22

Technical characteristics

Tightening torque	2 Nm Lock nut
Material (insert)	Polyamide (PA)
Material (hood/housing)	Zinc die-cast
Material (contacts)	Brass
Surface (contacts)	Gold plated
RoHS	compliant, compliant with exemption

Specifications and approvals

IEC 61076-2-101
UL 1977 ECBT2.E102079
CSA-C22.2 No. 182.3 ECBT8.E102079

Identification	Conductor cross-section (mm²)	Part number Male	Part number Female	Drawing (dimensions in mm)
Circular connectors M12, Panel feed through, With conductors, for front mounting, Unshielded 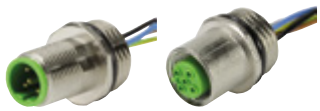	0.34	21 03 339 1301	21 03 339 2301	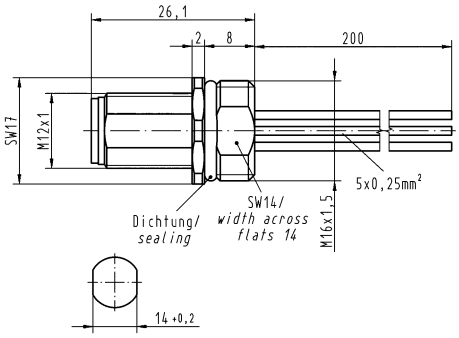 Panel cut out 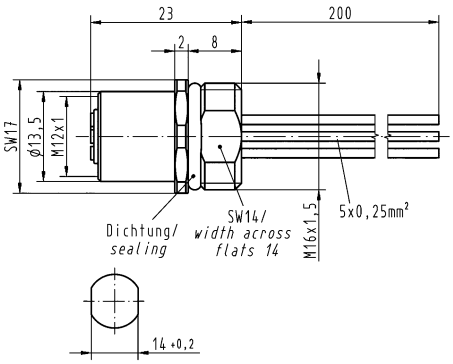 Panel cut out

Panel feed through

D-coding

Number of contacts

4

Unshielded

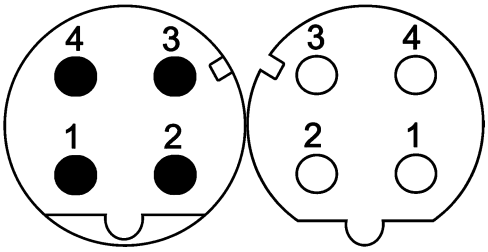

M12

Technical characteristics

Number of contacts	4
Rated current	4 A
Rated voltage	250 V
Rated impulse voltage	1.5 kV
Pollution degree	3
Insulation resistance	>10^8 Ω
Contact resistance	≤10 mΩ
Mating cycles	≥100
Locking type	Screw locking
Conductor length	50 cm
Degree of protection acc. to IEC 60529	IP67, when mated
Conductor cross-section	0.34 mm², 0.5 mm²
Conductor cross-section	AWG 22, AWG 20
Transmission characteristics	Cat. 5, Class D up to 100 MHz
Tightening torque	2 Nm Lock nut

Technical characteristics

Material (insert)	Polyamide (PA)
Material (hood/housing)	Zinc die-cast
Material (contacts)	Brass
Surface (contacts)	Gold plated
RoHS	compliant with exemption

Specifications and approvals

IEC 61076-2-101
UL 1977 ECBT2.E102079
CSA-C22.2 No. 182.3 ECBT8.E102079

PROFI NET, CE

Identification	Conductor cross-section (mm²)	Part number Male	Part number Female	Drawing (dimensions in mm)
Circular connectors M12, Panel feed through, With conductors, for front mounting, Unshielded 	0.34 0.5	21 03 371 1403 21 03 371 1405	21 03 371 2403	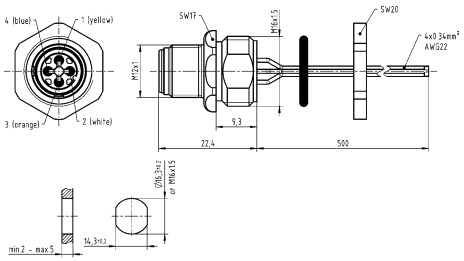 Panel cut out 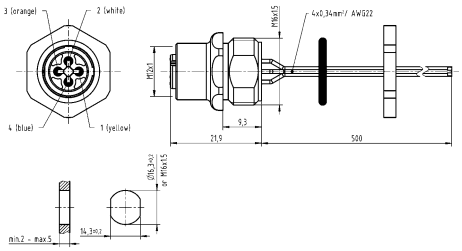 Panel cut out 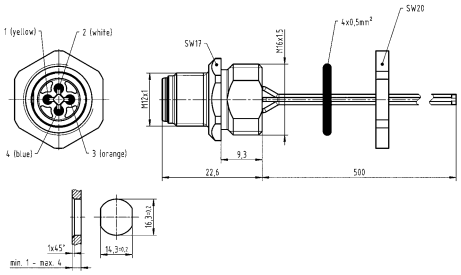 Panel cut out

D03 12 . 91

M12

Identification	Conductor cross-section (mm²)	Part number Male	Part number Female	Drawing (dimensions in mm)
Circular connectors M12, Panel feed through, With conductors, for front mounting, Unshielded  without lock nut	0.34		21 03 375 2400	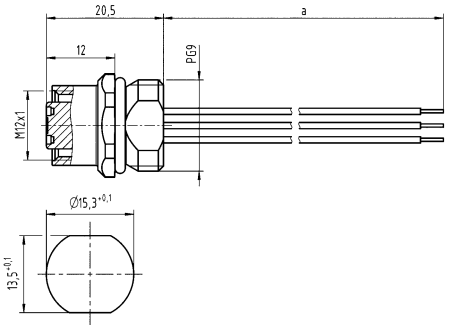 Panel cut out

Panel feed through

X-coding

M12

Number of contacts

8

4x 2x AWG 24/7
Shielded

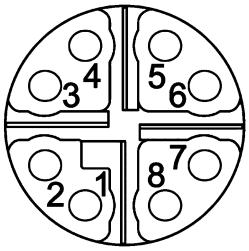

Technical characteristics

Number of contacts	8
Core structure	4x 2x AWG 24/7, 4x 2x AWG 26/7
Rated current	0.5 A
Rated voltage	50 V
Rated impulse voltage	1.5 kV
Pollution degree	3
Insulation resistance	>10^8 Ω
Contact resistance	≤10 mΩ
Mating cycles	≥100
Locking type	Screw locking, PushPull
Degree of protection acc. to IEC 60529	IP65 / IP67, when mated
Transmission characteristics	Cat. 6_A, Class E_A up to 500 MHz
Tightening torque	2 Nm Lock nut

Technical characteristics

Material (insert)	Liquid crystal polymer (LCP)
Material (hood/housing)	Zinc die-cast
Material (contacts)	Brass
Surface (contacts)	Gold plated
RoHS	compliant with exemption

Specifications and approvals

IEC 61076-2-109

Details

Other cable lengths on request!

Identification	Cable length	Part number Female	Drawing (dimensions in mm)
Circular connectors M12, Panel feed through, Pre-assembled on one side, EtherRail cable (4x 2x AWG 24/7), for rear mounting, Shielded	0.3 m 0.5 m 1 m 1.5 m	21 33 070 0853 003 21 33 070 0853 005 21 33 070 0853 010 21 33 070 0853 015	
Circular connectors M12, Panel feed through, Pre-assembled on one side, Industrial Ethernet cable (4x 2x AWG 26/7), for rear mounting, Shielded	0.3 m 0.5 m 1 m 1.5 m	21 33 080 0850 003 21 33 080 0850 005 21 33 080 0850 010 21 33 080 0850 015	

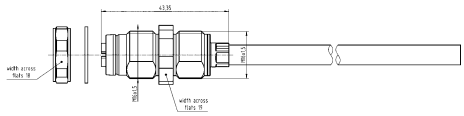

M12

Number of contacts

4+

Shielded

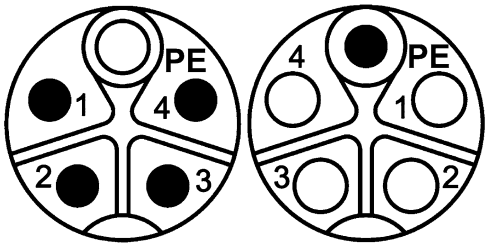

Technical characteristics

Number of contacts	4
Rated current	12 A
Rated voltage	630 V
Rated impulse voltage	6 kV
Pollution degree	3
Insulation resistance	>10^8 Ω
Contact resistance	≤10 mΩ
Mating cycles	≥100
Locking type	Screw locking, PushPull
Conductor length	30 cm
Degree of protection acc. to IEC 60529	IP65 / IP67, when mated

Technical characteristics

Conductor cross-section	2.5 mm², 1.5 mm²
Tightening torque	0.6 Nm, 2 Nm Lock nut
Material (insert)	Polyamide (PA)
Material (contacts)	Brass
Surface (contacts)	Gold plated

Specifications and approvals

IEC 61076-2-111

Identification	Conductor cross-section (mm²)	Part number Male	Part number Female	Drawing (dimensions in mm)
Circular connectors M12, Power, Panel feed through, With conductors, for front mounting, Shielded 	1.5 2.5	21 03 309 5503 21 03 309 5501	21 03 309 6503 21 03 309 6501	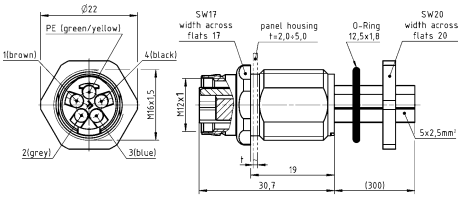  Panel cut out
Circular connectors M12, Power, Panel feed through, With conductors, for rear mounting, Shielded 	1.5 2.5	21 03 309 5504 21 03 309 5502	21 03 309 6504 21 03 309 6502	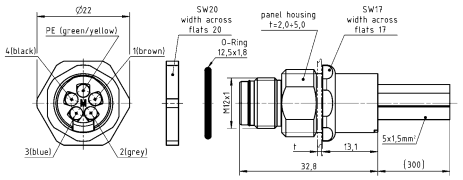  Panel cut out 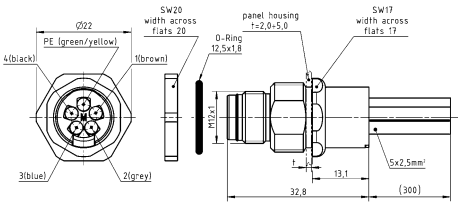  Panel cut out

Panel feed through

L-coding

M12

Number of contacts

4

Unshielded

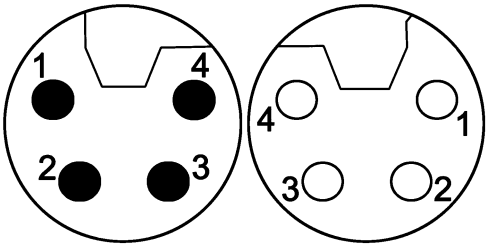

Technical characteristics

Number of contacts	4
Rated current	16 A
Rated voltage	63 V
Rated impulse voltage	1.5 kV
Pollution degree	3
Insulation resistance	>10^8 Ω
Contact resistance	≤10 mΩ
Mating cycles	≥100
Locking type	Screw locking
Conductor length	30 cm
Degree of protection acc. to IEC 60529	IP65 / IP67, when mated
Conductor cross-section	1.5 mm², 2.5 mm²
Conductor cross-section	AWG 16, AWG 14
Tightening torque	2 Nm Lock nut
Material (insert)	Polyamide (PA)

Technical characteristics

Colour (insert)	Black
Material (hood/housing)	Zinc die-cast
Material (contacts)	Copper alloy
Surface (contacts)	Gold plated
RoHS	compliant with exemption

Specifications and approvals

IEC 61076-2-111
UL 2238 CYJV2.E302521
CSA-C22.2 No. 182.3 CYJV8.E302521

Identification	Conductor cross-section (mm²)	Part number Male	Part number Female	Drawing (dimensions in mm)
Circular connectors M12, Power, Panel feed through, With conductors, for front mounting, Unshielded	1.5 2.5	21 03 596 1506 21 03 599 1506	21 03 596 2506 21 03 599 2506	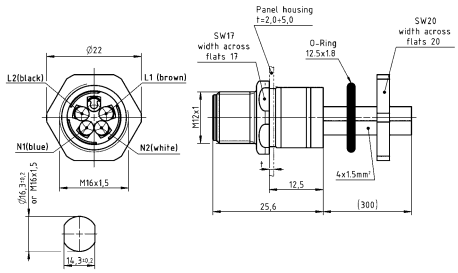 Panel cut out 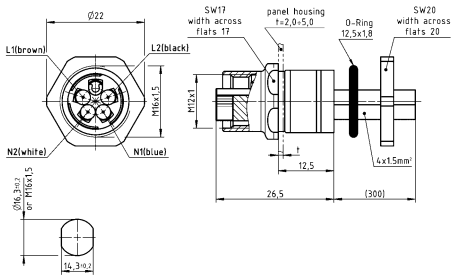 Panel cut out

D03 12 . 95

M12

Identification	Conductor cross-section (mm²)	Part number Male	Part number Female	Drawing (dimensions in mm)
Circular connectors M12, Power, Panel feed through, With conductors, for rear mounting, Unshielded 	1.5 2.5	21 03 596 1516 21 03 599 1516	21 03 596 2516 21 03 599 2516	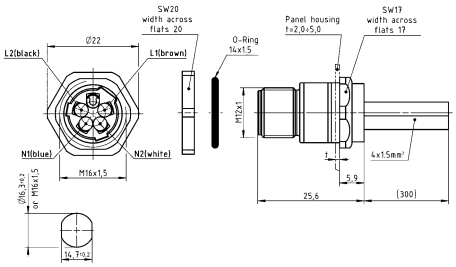 Panel cut out 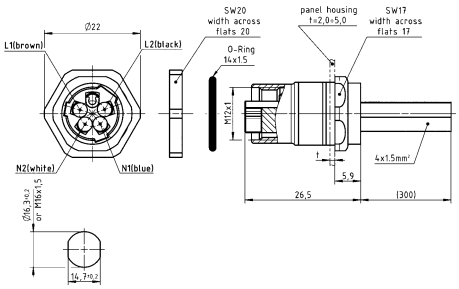 Panel cut out

Panel feed through

L-coding

Number of contacts

4+

Unshielded

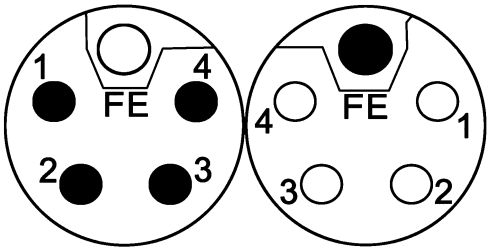

M12

Technical characteristics

Number of contacts	4
Rated current	16 A
Rated voltage	63 V
Rated impulse voltage	1.5 kV
Pollution degree	3
Insulation resistance	>10^8 Ω
Contact resistance	≤10 mΩ
Mating cycles	≥100
Locking type	Screw locking
Conductor length	30 cm
Degree of protection acc. to IEC 60529	IP65 / IP67, when mated
Conductor cross-section	1.5 mm², 2.5 mm²
Conductor cross-section	AWG 16, AWG 14
Tightening torque	2 Nm Lock nut
Material (insert)	Polyamide (PA)

Technical characteristics

Colour (insert)	Grey
Material (hood/housing)	Zinc die-cast
Material (contacts)	Copper alloy
Surface (contacts)	Gold plated
RoHS	compliant with exemption

Specifications and approvals

IEC 61076-2-111
UL 2238 CYJV2.E302521
CSA-C22.2 No. 182.3 CYJV8.E302521

Identification	Conductor cross-section (mm²)	Part number Male	Part number Female	Drawing (dimensions in mm)
Circular connectors M12, Power, Panel feed through, With conductors, for front mounting, Unshielded 	1.5 2.5	21 03 596 1505 21 03 599 1505	21 03 596 2505 21 03 599 2505	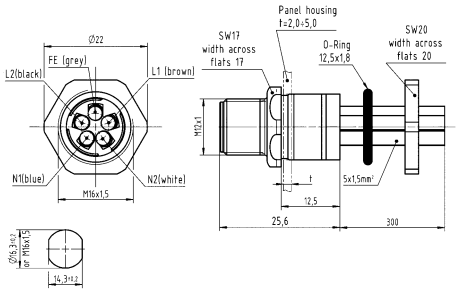 Panel cut out 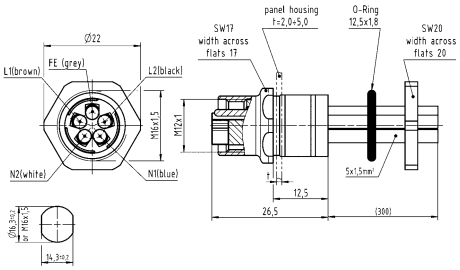 Panel cut out
Circular connectors M12, Power, Panel feed through, With conductors, for rear mounting, Unshielded	1.5 2.5	21 03 596 1515 21 03 599 1515	21 03 596 2515 21 03 599 2515	

D03 12 . 97

M12

Number of contacts

3+ ⏚

Unshielded

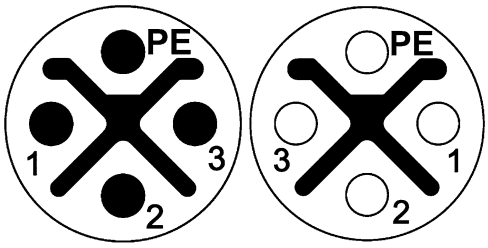

Technical characteristics

Number of contacts	3
Rated current	12 A
Rated voltage	630 V
Rated impulse voltage	6 kV
Pollution degree	3
Insulation resistance	>10^8 Ω
Contact resistance	≤10 mΩ
Mating cycles	≥100
Locking type	Screw locking, PushPull
Degree of protection acc. to IEC 60529	IP65 / IP67, when mated

Technical characteristics

Conductor cross-section	1.5 mm², 2.5 mm²
Conductor cross-section	AWG 16, AWG 14
Tightening torque	0.6 Nm, 2 Nm Lock nut
Material (insert)	Polyamide (PA)
Material (contacts)	Brass
Surface (contacts)	Gold plated

Specifications and approvals

IEC 61076-2-111

Identification	Conductor cross-section (mm²)	Part number Male	Part number Female	Drawing (dimensions in mm)
Circular connectors M12, Power, Panel feed through, With conductors, for front mounting, Unshielded 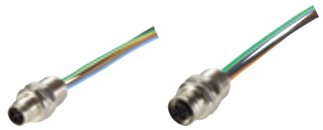	1.5 2.5	21 03 396 1401 21 03 399 1401	21 03 396 2401 21 03 399 2401	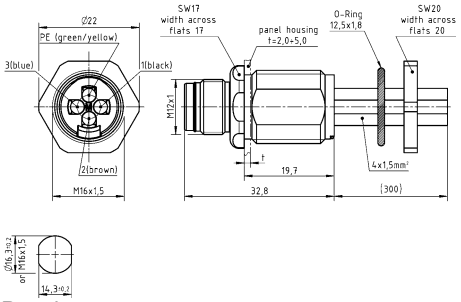 Panel cut out 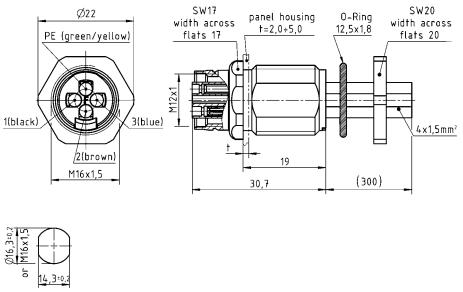 Panel cut out 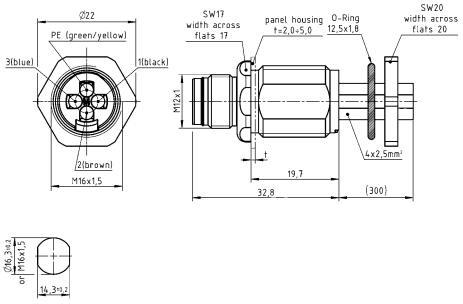 Panel cut out

Identification	Conductor cross-section (mm²)	Part number Male	Part number Female	Drawing (dimensions in mm)
Circular connectors M12, Power, Panel feed through, With conductors, for rear mounting, Unshielded	1.5 2.5	21 03 396 1402 21 03 399 1402	21 03 396 2402 21 03 399 2402	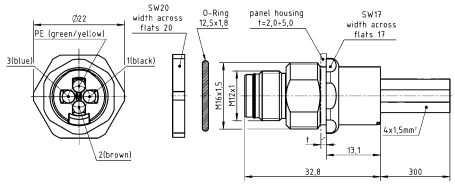  Panel cut out 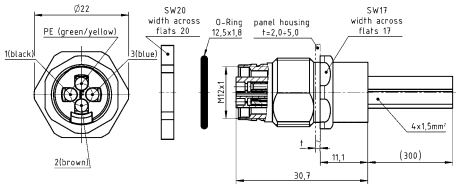  Panel cut out 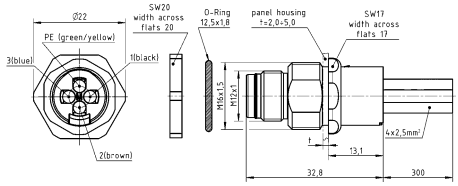  Panel cut out

Technical characteristics

RoHS	compliant with exemption, compliant

Identification	Part number	Drawing (dimensions in mm)
Lock nut, Pg 9 	21 01 000 0008	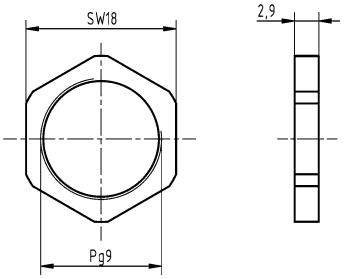
Lock nut, M16x1.5 	21 01 000 0010 21 01 000 0018	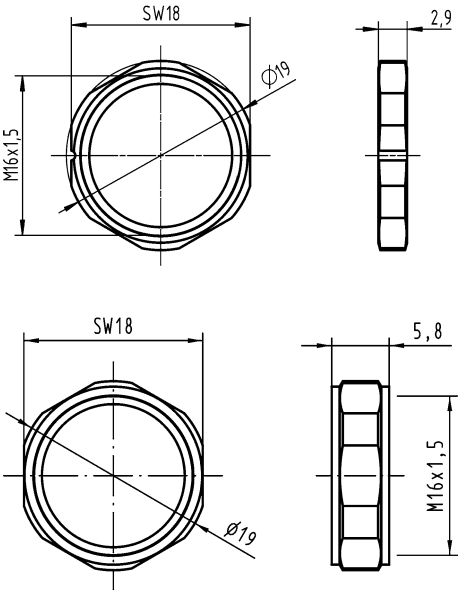
Lock nut, M14 x 1 	21 41 000 0011	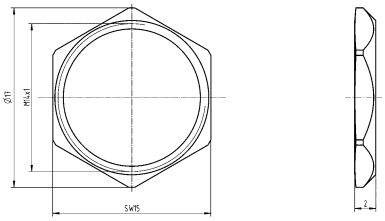

Technical characteristics

Degree of protection acc. to IEC 60529	IP65 / IP67, IP67

Technical characteristics

Material (accessories)	Thermoplastic
Colour (accessories)	Black
RoHS	compliant

Identification	Part number	Drawing (dimensions in mm)
Circular connectors M12, Cap, IP65 / IP67 	21 01 000 0003	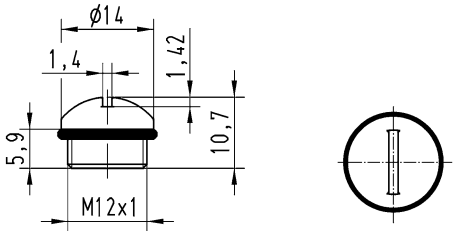
Circular connectors M12, Cap, for male inserts, with cord, IP67 	21 41 000 0001	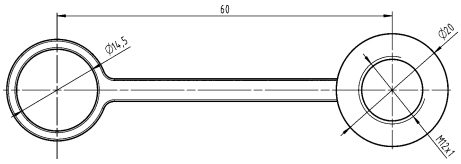
Circular connectors M12, Cap, for female inserts, with cord, IP67 	21 41 000 0002	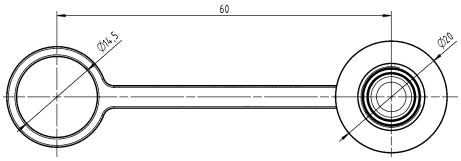

Technical characteristics

Degree of protection acc. to IEC 60529 IP65 / IP67

Technical characteristics

Material (accessories)	Metal
RoHS	compliant with exemption

Identification		Part number	Drawing (dimensions in mm)
Circular connectors M12, Cap, for female inserts, with cord		21 01 000 0030	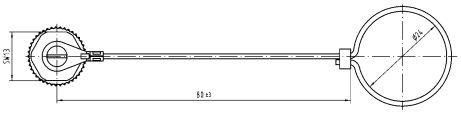
Circular connectors M12, Cap, for female inserts, with cable clip		21 01 000 0031	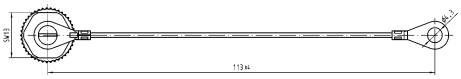
Circular connectors M12, Cap, for male inserts, with cord		21 01 000 0033	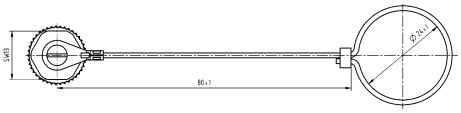
Circular connectors M12, Cap, for male inserts, with cable clip		21 01 000 0038	

Contents | Page

Number of contacts

6

Crimp termination

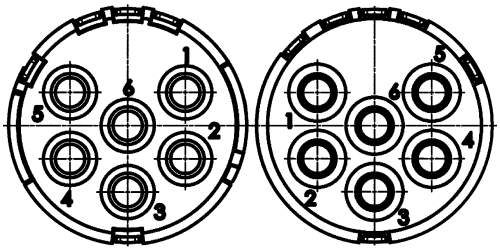

Technical characteristics

Number of contacts	6
Rated current	20 A
Rated voltage	300 V
Rated impulse voltage	2.5 kV
Pollution degree	3
Insulation resistance	>10^{10} Ω
Limiting temperature	-40 ... +125 °C
Mating cycles	≥500
Conductor cross-section	0.75 ... 2.5 mm²
Material (insert)	Polyamide (PA)

Technical characteristics

Colour (insert)	White
Material flammability class acc. to UL 94	V-0
RoHS	compliant

Specifications and approvals

UL 1977 ECBT2.E235076

Identification	Conductor cross-section (mm²)	Part number Male	Part number Female	Drawing (dimensions in mm)
Circular connectors M23, Signal, Inserts, Crimp termination  Please order crimp contacts separately. 6x 2 mm	0.75 ... 2.5	09 15 106 3001	09 15 106 3101	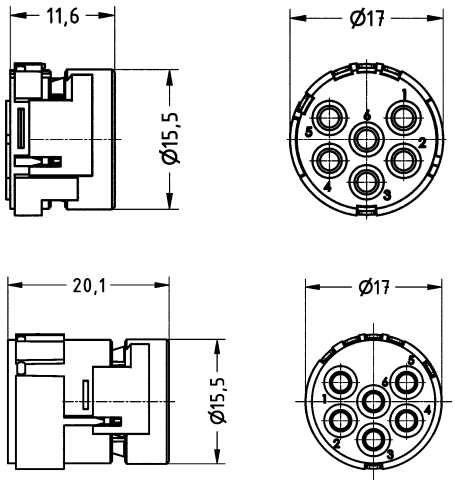

Number of contacts

6

Solder termination

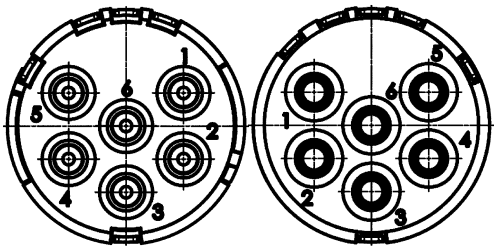

Technical characteristics

Number of contacts	6
Rated current	20 A
Rated voltage	300 V
Rated impulse voltage	2.5 kV
Pollution degree	3
Insulation resistance	>10^{10} Ω
Limiting temperature	-40 ... +125 °C
Mating cycles	≥500
Conductor cross-section	2.5 mm² max.
Material (insert)	Polyamide (PA)
Colour (insert)	White

Technical characteristics

Material (contacts)	Copper alloy
Surface (contacts)	Gold plated
Material flammability class acc. to UL 94	V-0
RoHS	compliant with exemption

Specifications and approvals

UL 1977 ECBT2.E235076

Identification	Conductor cross-section (mm²)	Part number Male	Part number Female	Drawing (dimensions in mm)
Circular connectors M23, Signal, Inserts, Solder termination 	2.5 max.	09 15 106 2602	09 15 106 2702	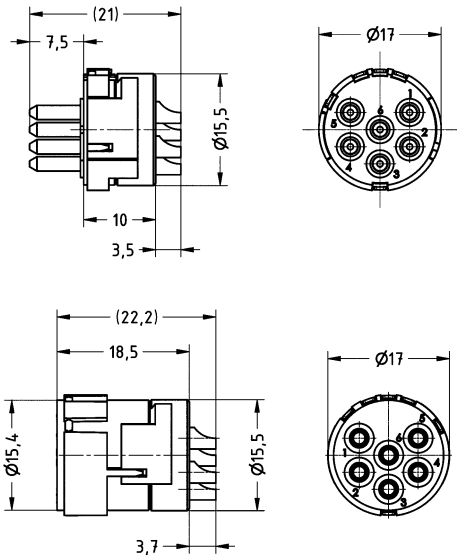

Number of contacts

6

PCB solder termination

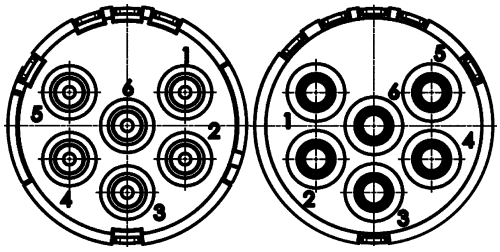

Technical characteristics

Number of contacts	6
Rated current	20 A
Rated voltage	300 V
Rated impulse voltage	2.5 kV
Pollution degree	3
Insulation resistance	>10^{10} Ω
Limiting temperature	-40 ... +125 °C
Mating cycles	≥500
Material (insert)	Polyamide (PA)
Colour (insert)	White

Technical characteristics

Material (contacts)	Copper alloy
Surface (contacts)	Gold plated
Material flammability class acc. to UL 94	V-0
RoHS	compliant with exemption

Specifications and approvals

UL 1977 ECBT2.E235076

Identification	Part number Male	Part number Female	Drawing (dimensions in mm)
Circular connectors M23, Signal, Inserts, PCB solder termination  Suitable for bulkhead mounted housings 09 15 100 0301, 0302, 0305, 0306 and 0307 only!	09 15 106 2603	09 15 106 2703	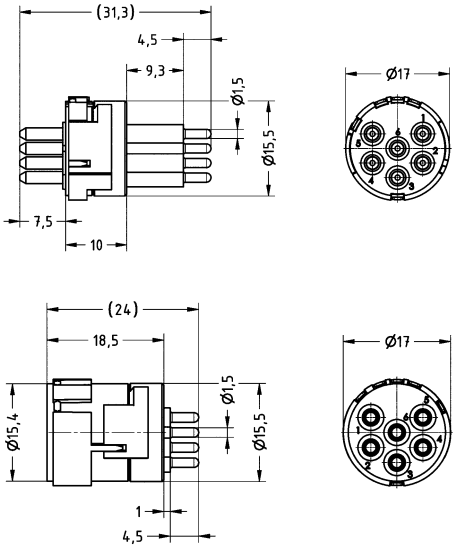

Number of contacts

7

Crimp termination

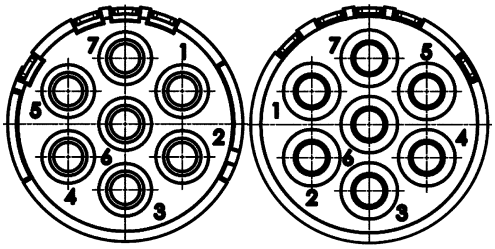

Technical characteristics

Number of contacts	7
Rated current	20 A
Rated voltage	300 V
Rated impulse voltage	2.5 kV
Pollution degree	3
Insulation resistance	>10^{10} Ω
Limiting temperature	-40 ... +125 °C
Mating cycles	≥500
Conductor cross-section	0.75 ... 2.5 mm²
Material (insert)	Polyamide (PA)

Technical characteristics

Colour (insert)	White
Material flammability class acc. to UL 94	V-0
RoHS	compliant with exemption

Specifications and approvals

UL 1977 ECBT2.E235076

Identification	Conductor cross-section (mm²)	Part number Male	Part number Female	Drawing (dimensions in mm)
Circular connectors M23, Signal, Inserts, Crimp termination  Please order crimp contacts separately. 7x 2 mm	0.75 ... 2.5	09 15 107 3001	09 15 107 3101	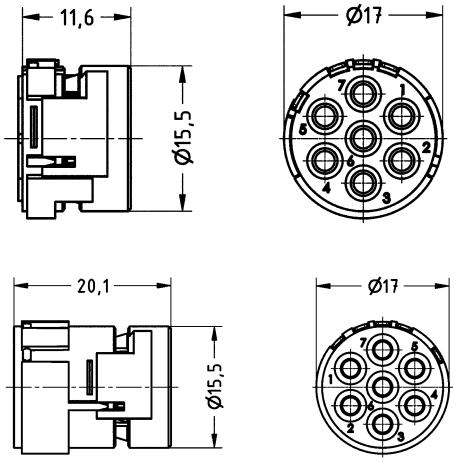

Number of contacts

7

Solder termination

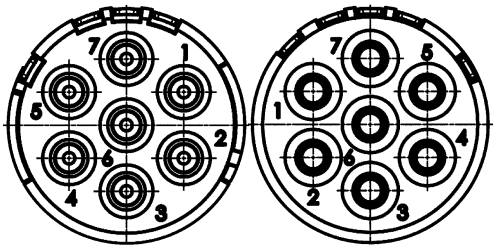

Technical characteristics

Number of contacts	7
Rated current	20 A
Rated voltage	300 V
Rated impulse voltage	2.5 kV
Pollution degree	3
Insulation resistance	>10^{10} Ω
Limiting temperature	-40 ... +125 °C
Mating cycles	≥500
Conductor cross-section	2.5 mm² max.
Material (insert)	Polyamide (PA)
Colour (insert)	White

Technical characteristics

Material (contacts)	Copper alloy
Surface (contacts)	Gold plated
Material flammability class acc. to UL 94	V-0
RoHS	compliant with exemption

Specifications and approvals

UL 1977 ECBT2.E235076

Identification	Conductor cross-section (mm²)	Part number Male	Part number Female	Drawing (dimensions in mm)
Circular connectors M23, Signal, Inserts, Solder termination 	2.5 max.	09 15 107 2602	09 15 107 2702	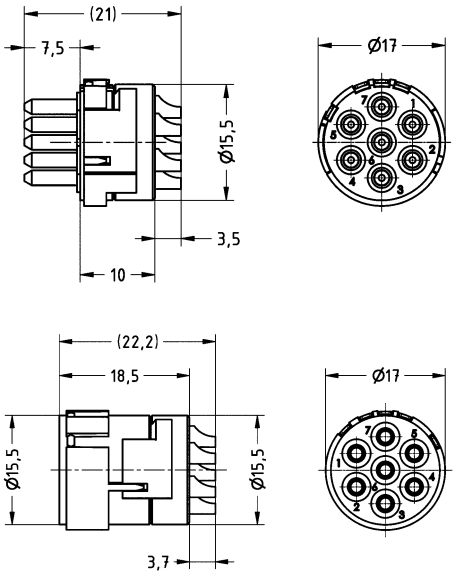

Number of contacts

7

PCB solder termination

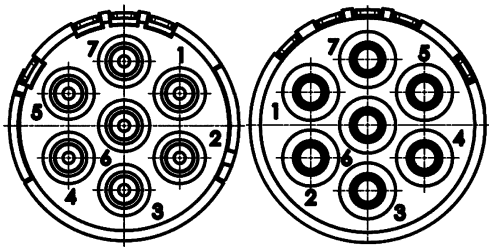

Technical characteristics

Number of contacts	7
Rated current	20 A
Rated voltage	300 V
Rated impulse voltage	2.5 kV
Pollution degree	3
Insulation resistance	>10^{10} Ω
Limiting temperature	-40 ... +125 °C
Mating cycles	≥500
Material (insert)	Polyamide (PA)
Colour (insert)	White

Technical characteristics

Material (contacts)	Copper alloy
Surface (contacts)	Gold plated
Material flammability class acc. to UL 94	V-0
RoHS	compliant with exemption

Specifications and approvals

UL 1977 ECBT2.E235076

Identification	Part number Male	Part number Female	Drawing (dimensions in mm)
Circular connectors M23, Signal, Inserts, PCB solder termination  Suitable for bulkhead mounted housings 09 15 100 0301, 0302, 0305, 0306 and 0307 only!	09 15 107 2603	09 15 107 2703	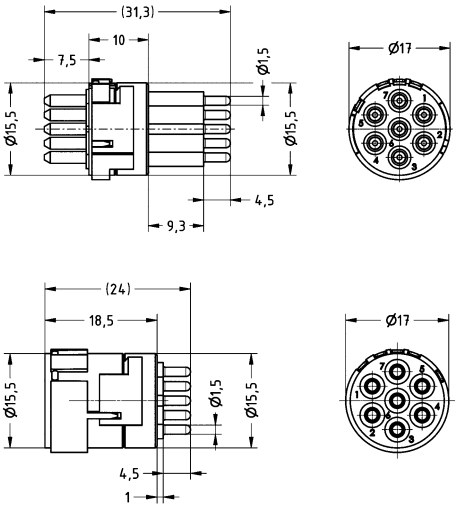

Number of contacts

8

+ 1 additional special contact
Crimp termination

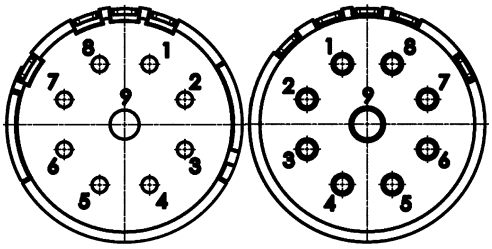

Technical characteristics

Number of contacts	8
Additional contacts	+ 1 additional special contact
Rated current	8 A
Rated voltage	200 V
Rated impulse voltage	2.5 kV
Pollution degree	3
Rated current (special contact)	20 A
Rated voltage (special contact)	200 V
Rated impulse voltage (special contact)	2.5 kV
Pollution degree (special contact)	3
Insulation resistance	$>10^{10}$ Ω

Technical characteristics

Limiting temperature	-40 ... +125 °C
Mating cycles	≥500
Conductor cross-section	0.08 ... 1.5 mm²
Material (insert)	Polyamide (PA)
Colour (insert)	White
Material flammability class acc. to UL 94	V-0
RoHS	compliant with exemption

Specifications and approvals

UL 1977 ECBT2.E235076

Identification	Conductor cross-section (mm²)	Part number Male	Part number Female	Drawing (dimensions in mm)
Circular connectors M23, Signal, Inserts, Crimp termination  Please order crimp contacts separately. 8x 1 mm 1x 2 mm	0.08 ... 1.5	09 15 109 3001	09 15 109 3101	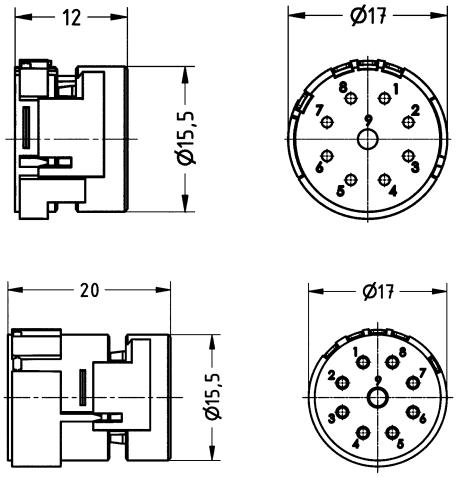

Number of contacts

8

+ 1 additional special contact
Solder termination

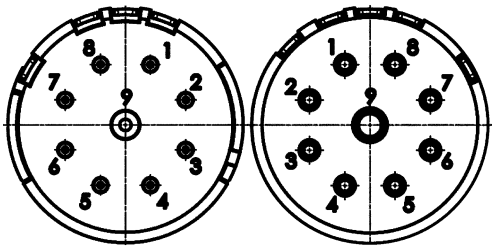

Technical characteristics

Number of contacts	8
Additional contacts	+ 1 additional special contact
Rated current	8 A
Rated voltage	200 V
Rated impulse voltage	2.5 kV
Pollution degree	3
Rated current (special contact)	20 A
Rated voltage (special contact)	200 V
Rated impulse voltage (special contact)	2.5 kV
Pollution degree (special contact)	3
Insulation resistance	$>10^{10}$ Ω
Limiting temperature	-40 ... +125 °C

Technical characteristics

Mating cycles	≥500
Conductor cross-section	1 mm² max.
Material (insert)	Polyamide (PA)
Colour (insert)	White
Material (contacts)	Copper alloy
Surface (contacts)	Gold plated
Material flammability class acc. to UL 94	V-0
RoHS	compliant with exemption

Specifications and approvals

UL 1977 ECBT2.E235076

Identification	Conductor cross-section (mm²)	Part number Male	Part number Female	Drawing (dimensions in mm)
Circular connectors M23, Signal, Inserts, Solder termination 	1 max.	09 15 109 2602	09 15 109 2702	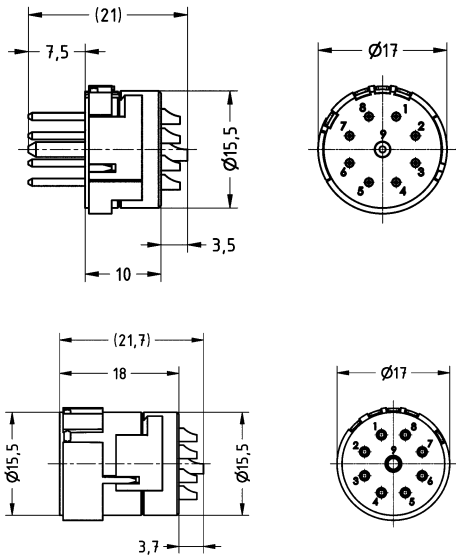

Number of contacts

8

+ 1 additional special contact
PCB solder termination

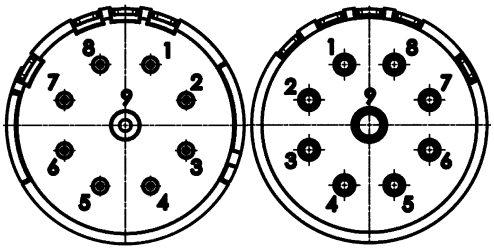

Technical characteristics

Number of contacts	8
Additional contacts	+ 1 additional special contact
Rated current	8 A
Rated voltage	200 V
Rated impulse voltage	2.5 kV
Pollution degree	3
Rated current (special contact)	20 A
Rated voltage (special contact)	200 V
Rated impulse voltage (special contact)	2.5 kV
Pollution degree (special contact)	3
Insulation resistance	$>10^{10}$ Ω
Limiting temperature	-40 ... +125 °C

Technical characteristics

Mating cycles	≥500
Material (insert)	Polyamide (PA)
Colour (insert)	White
Material (contacts)	Copper alloy
Surface (contacts)	Gold plated
Material flammability class acc. to UL 94	V-0
RoHS	compliant with exemption

Specifications and approvals

UL 1977 ECBT2.E235076

Identification	Part number Male	Part number Female	Drawing (dimensions in mm)
Circular connectors M23, Signal, Inserts, PCB solder termination  Suitable for bulkhead mounted housings 09 15 100 0301, 0302, 0305, 0306 and 0307 only!	09 15 109 2603	09 15 109 2703	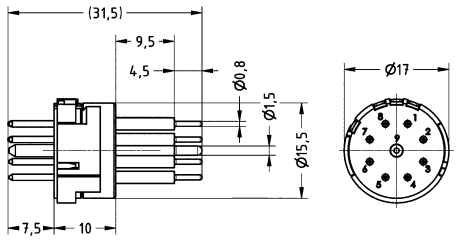 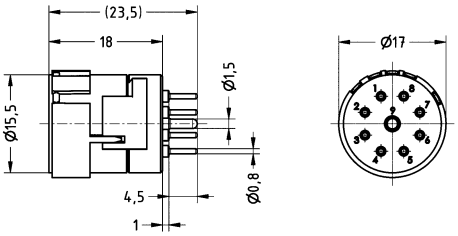

Number of contacts

11+

Crimp termination

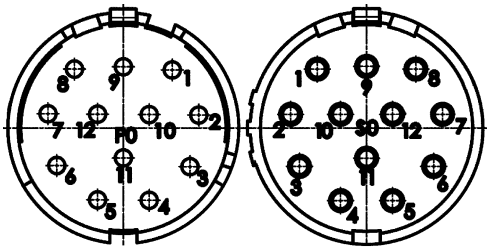

Technical characteristics

Number of contacts	11
Rated current	8 A
Rated voltage	200 V
Rated impulse voltage	2.5 kV
Pollution degree	3
Insulation resistance	>10^{10} Ω
Limiting temperature	-40 ... +125 °C
Mating cycles	≥500
Conductor cross-section	0.08 ... 1.5 mm²
Material (insert)	Polyamide (PA)

Technical characteristics

Colour (insert)	Grey
Material flammability class acc. to UL 94	V-0
RoHS	compliant with exemption

Specifications and approvals

UL 1977 ECBT2.E235076

Identification	Conductor cross-section (mm²)	Part number Male	Part number Female	Drawing (dimensions in mm)
Circular connectors M23, Signal, Inserts, Crimp termination 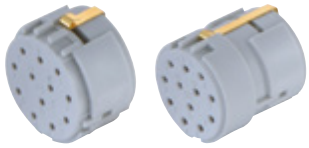 Please order crimp contacts separately. 12x 1 mm	0.08 ... 1.5	09 15 112 3021	09 15 112 3121	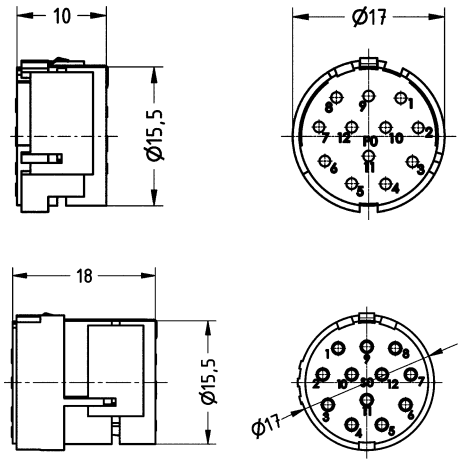

Number of contacts

11+ ⏚

Solder termination

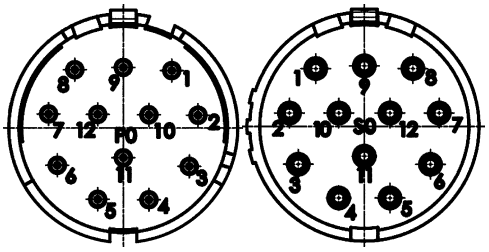

Technical characteristics

Number of contacts	11
Rated current	8 A
Rated voltage	200 V
Rated impulse voltage	2.5 kV
Pollution degree	3
Insulation resistance	>10^{10} Ω
Limiting temperature	-40 ... +125 °C
Mating cycles	≥500
Conductor cross-section	1 mm² max.
Material (insert)	Polyamide (PA)
Colour (insert)	Grey

Technical characteristics

Material (contacts)	Copper alloy
Surface (contacts)	Gold plated
Material flammability class acc. to UL 94	V-0
RoHS	compliant with exemption

Specifications and approvals

UL 1977 ECBT2.E235076

Identification	Conductor cross-section (mm²)	Part number Male	Part number Female	Drawing (dimensions in mm)
Circular connectors M23, Signal, Inserts, Solder termination 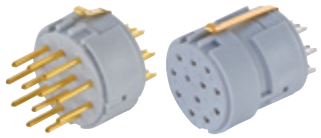	1 max.	09 15 112 2622	09 15 112 2722	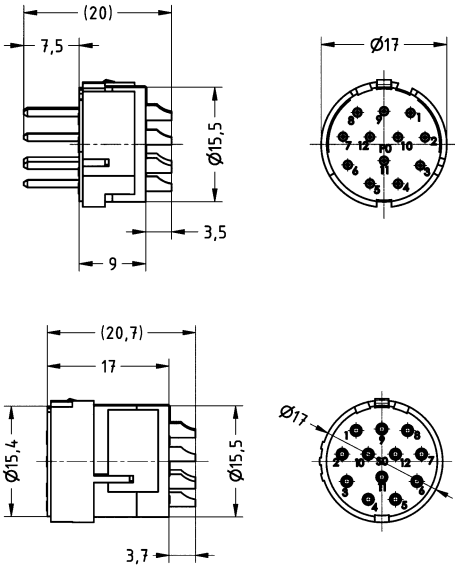

Number of contacts

12

Crimp termination

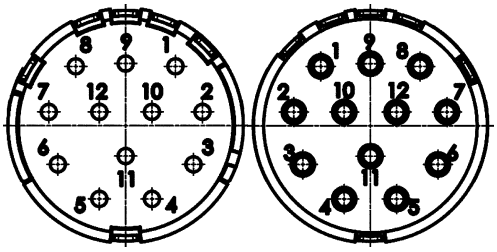

Technical characteristics

Number of contacts	12
Rated current	8 A
Rated voltage	200 V
Rated impulse voltage	2.5 kV
Pollution degree	3
Insulation resistance	>10^{10} Ω
Limiting temperature	-40 ... +125 °C
Mating cycles	≥500
Conductor cross-section	0.08 ... 1.5 mm²
Material (insert)	Polyamide (PA)

Technical characteristics

Colour (insert)	White
Material flammability class acc. to UL 94	V-0
RoHS	compliant with exemption, compliant

Specifications and approvals

UL 1977 ECBT2.E235076

Identification	Conductor cross-section (mm²)	Part number Male	Part number Female	Drawing (dimensions in mm)
Circular connectors M23, Signal, Inserts, Crimp termination  Please order crimp contacts separately. 12x 1 mm	0.08 ... 1.5	09 15 112 3001	09 15 112 3101	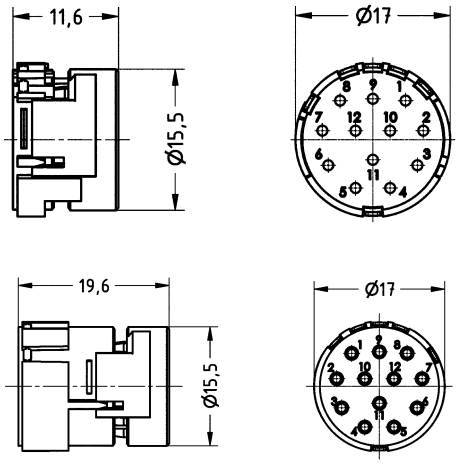
Circular connectors M23, Signal, Inserts, Marking in opposite direction, Crimp termination Please order crimp contacts separately. 12x 1 mm	0.08 ... 1.5	09 15 112 3011	09 15 112 3111	

Number of contacts

12

Solder termination

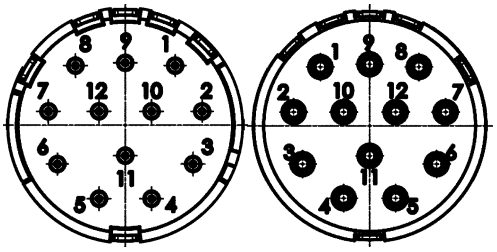

Technical characteristics

Number of contacts	12
Rated current	8 A
Rated voltage	200 V
Rated impulse voltage	2.5 kV
Pollution degree	3
Insulation resistance	>10^{10} Ω
Limiting temperature	-40 ... +125 °C
Mating cycles	≥500
Conductor cross-section	1 mm² max.
Material (insert)	Polyamide (PA)
Colour (insert)	White

Technical characteristics

Material (contacts)	Copper alloy
Surface (contacts)	Gold plated
Material flammability class acc. to UL 94	V-0
RoHS	compliant with exemption, compliant

Specifications and approvals

UL 1977 ECBT2.E235076

Identification	Conductor cross-section (mm²)	Part number Male	Part number Female	Drawing (dimensions in mm)
Circular connectors M23, Signal, Inserts, Solder termination 	1 max.	09 15 112 2602	09 15 112 2702	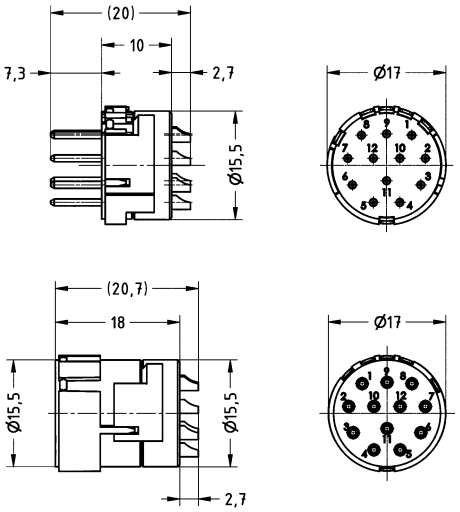
Circular connectors M23, Signal, Inserts, Marking in opposite direction, Solder termination	1 max.	09 15 112 2612	09 15 112 2712	

Number of contacts

12

PCB solder termination

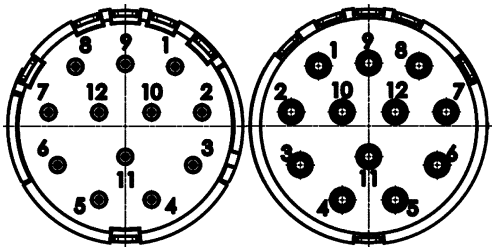

Technical characteristics

Number of contacts	12
Rated current	8 A
Rated voltage	200 V
Rated impulse voltage	2.5 kV
Pollution degree	3
Insulation resistance	>10^{10} Ω
Limiting temperature	-40 ... +125 °C
Mating cycles	≥500
Material (insert)	Polyamide (PA)
Colour (insert)	White

Technical characteristics

Material (contacts)	Copper alloy
Surface (contacts)	Gold plated
Material flammability class acc. to UL 94	V-0
RoHS	compliant with exemption

Specifications and approvals

UL 1977 ECBT2.E235076

Identification	Part number Male	Part number Female	Drawing (dimensions in mm)
Circular connectors M23, Signal, Inserts, PCB solder termination 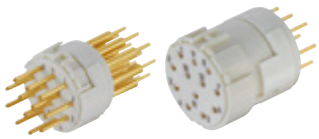 Suitable for bulkhead mounted housings 09 15 100 0301, 0302, 0305, 0306 and 0307 only!	09 15 112 2603	09 15 112 2703	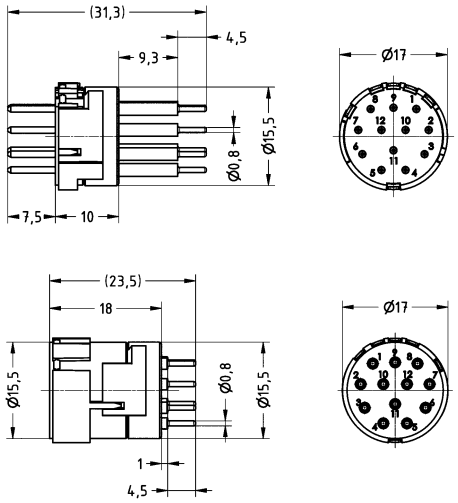

Number of contacts

17

Crimp termination

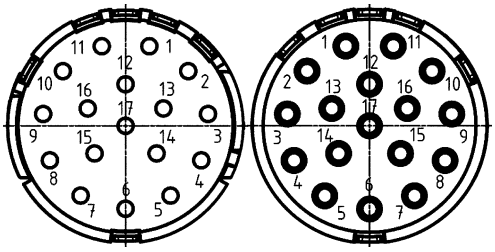

Technical characteristics

Number of contacts	17
Rated current	8 A
Rated voltage	160 V
Rated impulse voltage	1.5 kV
Pollution degree	3
Insulation resistance	>10^6 Ω
Limiting temperature	-40 ... +125 °C
Mating cycles	≥500
Conductor cross-section	0.08 ... 1.5 mm²
Material (insert)	Polyamide (PA)

Technical characteristics

Colour (insert)	White
Material flammability class acc. to UL 94	V-0
RoHS	compliant with exemption

Specifications and approvals

UL 1977 ECBT2.E235076

Identification	Conductor cross-section (mm²)	Part number Male	Part number Female	Drawing (dimensions in mm)
Circular connectors M23, Signal, Inserts, Crimp termination  Please order crimp contacts separately. 17x 1 mm	0.08 ... 1.5	09 15 117 3001	09 15 117 3101	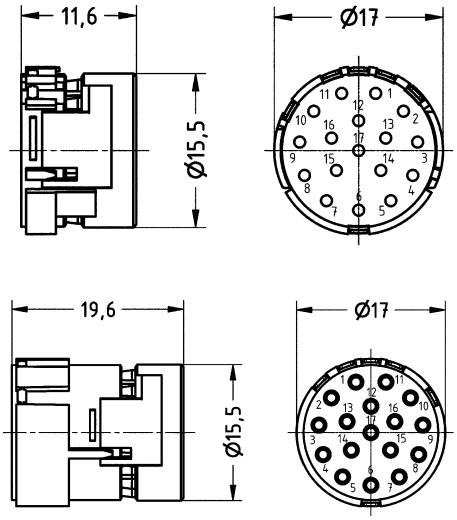

Number of contacts

17

Solder termination

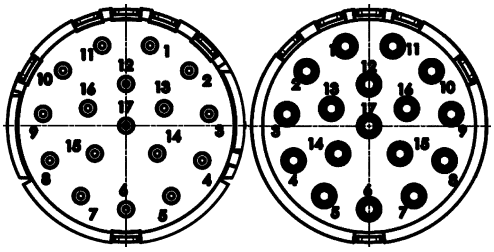

Technical characteristics

Number of contacts	17
Rated current	8 A
Rated voltage	160 V
Rated impulse voltage	1.5 kV
Pollution degree	3
Insulation resistance	>10^6 Ω
Limiting temperature	-40 ... +125 °C
Mating cycles	≥500
Conductor cross-section	1 mm² max.
Material (insert)	Polyamide (PA)
Colour (insert)	White

Technical characteristics

Material (contacts)	Copper alloy
Surface (contacts)	Gold plated
Material flammability class acc. to UL 94	V-0
RoHS	compliant with exemption

Specifications and approvals

UL 1977 ECBT2.E235076

Identification	Conductor cross-section (mm²)	Part number Male	Part number Female	Drawing (dimensions in mm)
Circular connectors M23, Signal, Inserts, Solder termination 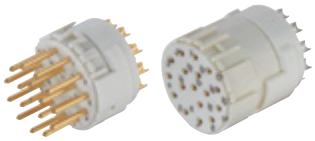	1 max.	09 15 117 2602	09 15 117 2702	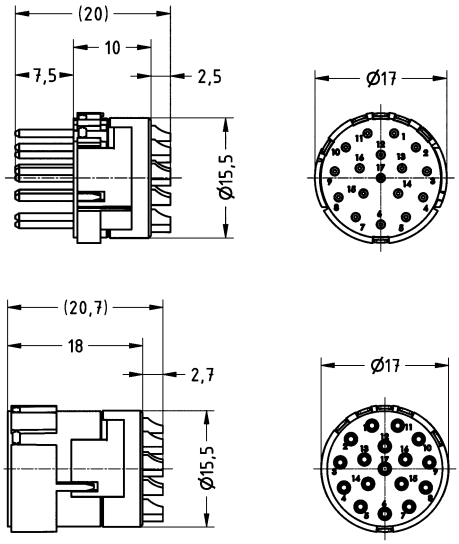

Number of contacts

17

PCB solder termination

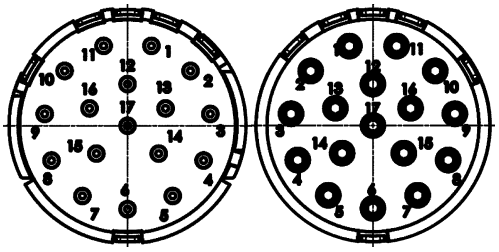

Technical characteristics

Number of contacts	17
Rated current	8 A
Rated voltage	160 V
Rated impulse voltage	1.5 kV
Pollution degree	3
Insulation resistance	>10^6 Ω
Limiting temperature	-40 ... +125 °C
Mating cycles	≥500
Material (insert)	Polyamide (PA)
Colour (insert)	White

Technical characteristics

Material (contacts)	Copper alloy
Surface (contacts)	Gold plated
Material flammability class acc. to UL 94	V-0
RoHS	compliant with exemption

Specifications and approvals

UL 1977 ECBT2.E235076

Identification	Part number Male	Part number Female	Drawing (dimensions in mm)
Circular connectors M23, Signal, Inserts, PCB solder termination 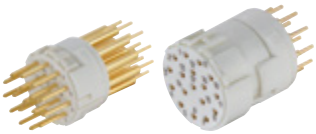 Suitable for bulkhead mounted housings 09 15 100 0301, 0302, 0305, 0306 and 0307 only!	09 15 117 2603	09 15 117 2703	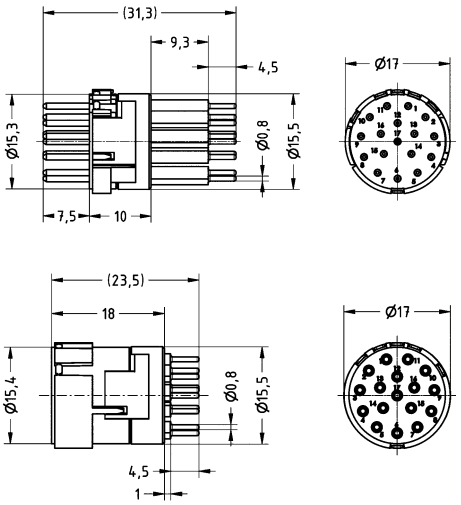

Number of contacts

16

+ 3 additional special contacts
Crimp termination

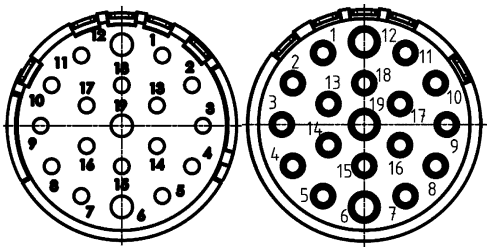

Technical characteristics

Number of contacts	16
Additional contacts	+ 3 additional special contacts
Rated current	8 A
Rated voltage	100 V
Rated impulse voltage	1.5 kV
Pollution degree	3
Rated current (special contact)	10 A
Rated voltage (special contact)	100 V
Rated impulse voltage (special contact)	1.5 kV
Pollution degree (special contact)	3
Insulation resistance	>10^6 Ω

Technical characteristics

Limiting temperature	-40 ... +125 °C
Mating cycles	≥500
Conductor cross-section	0.08 ... 1.5 mm²
Material (insert)	Polyamide (PA)
Colour (insert)	White
Material flammability class acc. to UL 94	V-0
RoHS	compliant with exemption

Specifications and approvals

UL 1977 ECBT2.E235076

Identification	Conductor cross-section (mm²)	Part number Male	Part number Female	Drawing (dimensions in mm)
Circular connectors M23, Signal, Inserts, Crimp termination  Please order crimp contacts separately. 16x 1 mm 3x 1.5 mm	0.08 ... 1.5	09 15 119 3001	09 15 119 3101	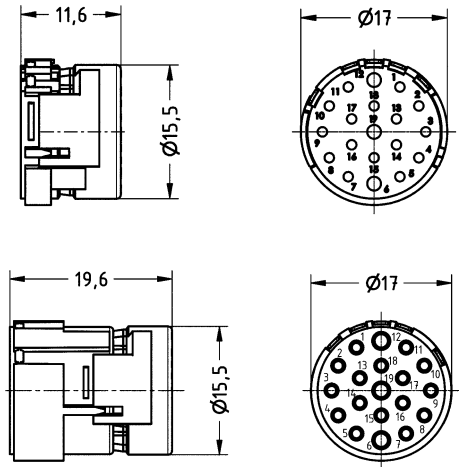

Number of contacts

16

+ 3 additional special contacts
Solder termination

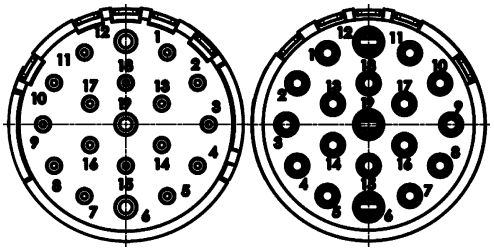

Technical characteristics

Number of contacts	16
Additional contacts	+ 3 additional special contacts
Rated current	8 A
Rated voltage	100 V
Rated impulse voltage	1.5 kV
Pollution degree	3
Rated current (special contact)	10 A
Rated voltage (special contact)	100 V
Rated impulse voltage (special contact)	1.5 kV
Pollution degree (special contact)	3
Insulation resistance	>10^6 Ω
Limiting temperature	-40 ... +125 °C

Technical characteristics

Mating cycles	≥500
Conductor cross-section	1 mm² max.
Material (insert)	Polyamide (PA)
Colour (insert)	White
Material (contacts)	Copper alloy
Surface (contacts)	Gold plated
Material flammability class acc. to UL 94	V-0
RoHS	compliant with exemption

Specifications and approvals

UL 1977 ECBT2.E235076

Identification	Conductor cross-section (mm²)	Part number Male	Part number Female	Drawing (dimensions in mm)
Circular connectors M23, Signal, Inserts, Solder termination 	1 max.	09 15 119 2602	09 15 119 2702	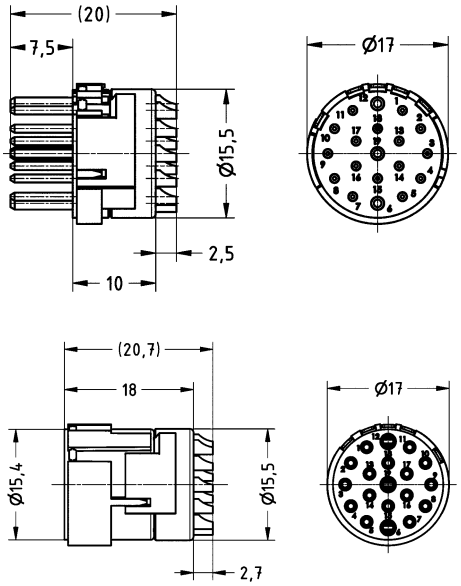

Number of contacts

16

+ 3 additional special contacts
PCB solder termination

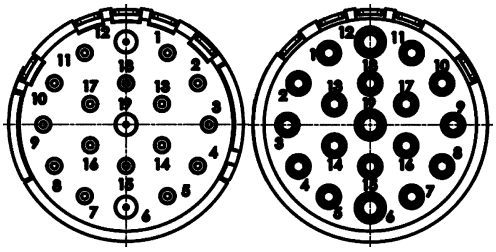

Technical characteristics

Number of contacts	16
Additional contacts	+ 3 additional special contacts
Rated current	8 A
Rated voltage	100 V
Rated impulse voltage	1.5 kV
Pollution degree	3
Rated current (special contact)	10 A
Rated voltage (special contact)	100 V
Rated impulse voltage (special contact)	1.5 kV
Pollution degree (special contact)	3
Insulation resistance	>10^6 Ω
Limiting temperature	-40 ... +125 °C

Technical characteristics

Mating cycles	≥500
Material (insert)	Polyamide (PA)
Colour (insert)	White
Material (contacts)	Copper alloy
Surface (contacts)	Gold plated
Material flammability class acc. to UL 94	V-0
RoHS	compliant with exemption

Specifications and approvals

UL 1977 ECBT2.E235076

Identification	Part number Male	Part number Female	Drawing (dimensions in mm)
Circular connectors M23, Signal, Inserts, PCB solder termination 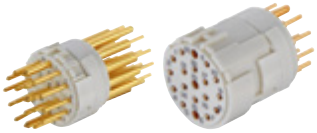 Suitable for bulkhead mounted housings 09 15 100 0301, 0302, 0305, 0306 and 0307 only!	09 15 119 2603	09 15 119 2703	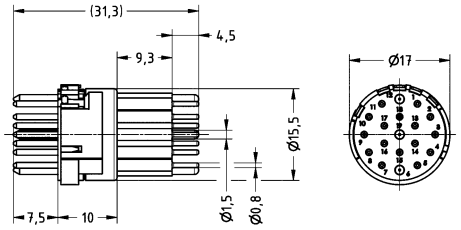 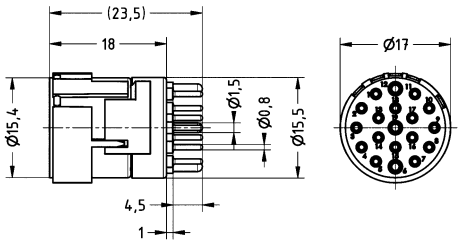

Technical characteristics

Contact resistance	≤3 mΩ
Conductor cross-section	0.08 ... 0.56 mm², 0.14 ... 1 mm², 0.75 ... 1.5 mm², 0.75 ... 2.5 mm², 0.34 ... 1 mm², 0.14 ... 0.56 mm², 0.56 ... 1 mm²
Conductor cross-section	AWG 28 ... AWG 20, AWG 26 ... AWG 17, AWG 19 ... AWG 16, AWG 19 ... AWG 14, AWG 22 ... AWG 17, AWG 26 ... AWG 20, AWG 20 ... AWG 17

Technical characteristics

Material (contacts)	Copper alloy
Surface (contacts)	Gold plated
RoHS	compliant with exemption

Specifications and approvals

EN 60664-1
IEC 61984

Identification	Conductor cross-section (mm²)	Part number Male	Part number Female	Drawing (dimensions in mm)
Circular connectors M23, Signal, Crimp contact, 1 mm, Turned contacts 	0.08 ... 0.56 0.14 ... 1 0.34 ... 1 0.75 ... 1.5	09 15 100 6101 09 15 100 6102 09 15 100 6103	09 15 100 6201 09 15 100 6202 09 15 100 6203	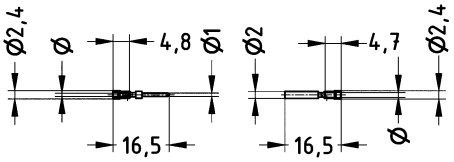 Stripping length 4 mm
Circular connectors M23, Signal, Crimp contact, 2 mm, Turned contacts 	0.75 ... 2.5	09 15 100 6121	09 15 100 6221	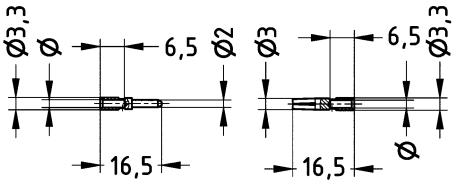 Stripping length 4 mm
Circular connectors M23, Signal, Crimp contact, 1.5 mm, Turned contacts 	0.14 ... 0.56 0.14 ... 1 0.56 ... 1	09 15 100 6111	09 15 100 6211 09 15 100 6212	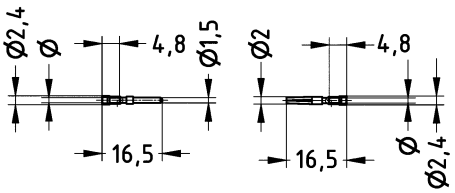 Stripping length 4 mm

Technical characteristics

Limiting temperature	-40 ... +125 °C
Locking type	Screw locking, ComLock rapid locking
Degree of protection acc. to IEC 60529	IP67, in locked position, IP69 / IPX9K acc. to ISO 20653
Material (hood/housing)	Copper-zinc alloy
Surface (hood/housing)	Nickel plated
Material (seal)	NBR

Technical characteristics

Colour (seal)	Black
RoHS	compliant with exemption, compliant

Specifications and approvals

UL 1977 ECBT2.E235076

Identification	Clamping range (mm)	Part number	Drawing (dimensions in mm)
Circular connectors M23, Signal, Bulkhead mounted housing, Front mounting, Fixing hole 4 x 2.7 mm 		09 15 100 0301	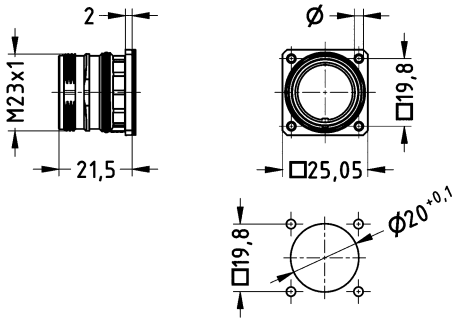 Panel cut out
Circular connectors M23, Signal, Bulkhead mounted housing, Front mounting, Fixing hole 4 x 3.2 mm 		09 15 100 0302	

Identification	Clamping range (mm)	Part number	Drawing (dimensions in mm)
Circular connectors M23, Signal, Bulkhead mounted housing, Front mounting, Angled, Fixing hole 4 x 2.7 mm 		09 15 100 0901	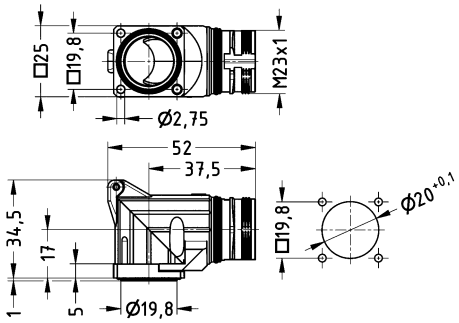 Panel cut out
Circular connectors M23, Signal, Bulkhead mounted housing, Front mounting, Angled, Rotatable, Fixing hole 4 x 2.7 mm 		09 15 100 0902	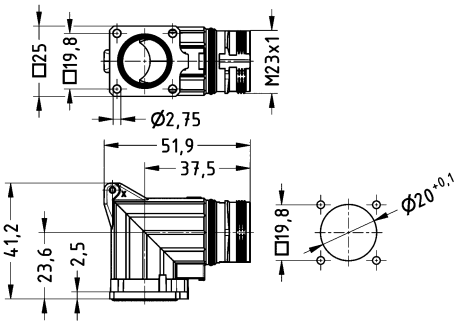 Panel cut out
Circular connectors M23, Signal, Bulkhead mounted housing, Front mounting, Thread M20 x 1.5  for male inserts Not compatible to ComLock		09 15 100 0363	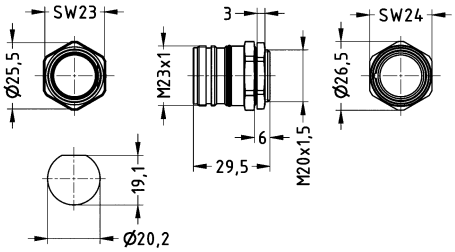 Panel cut out
Circular connectors M23, Signal, Bulkhead mounted housing, Front mounting, Thread Pg 13.5  for male inserts Not compatible to ComLock		09 15 100 0364	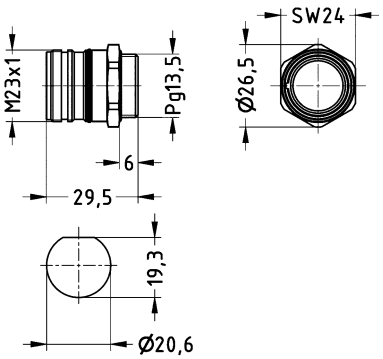 Panel cut out

Identification	Clamping range (mm)	Part number	Drawing (dimensions in mm)
Circular connectors M23, Signal, Bulkhead mounted housing, Front mounting, Thread M20 x 1.5  for female inserts Not compatible to ComLock		09 15 100 0373	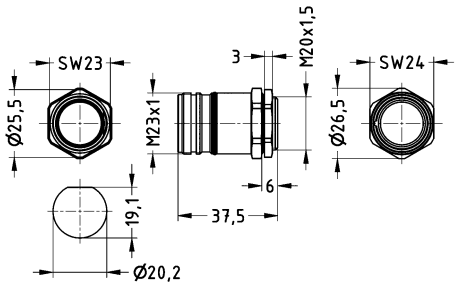 Panel cut out
Circular connectors M23, Signal, Bulkhead mounted housing, Front mounting, Thread Pg 13.5  for female inserts Not compatible to ComLock		09 15 100 0374	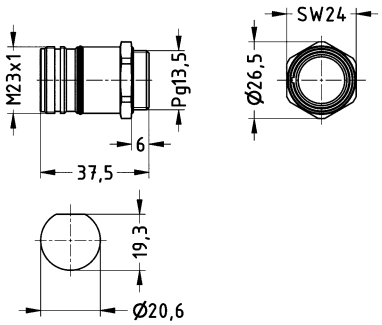 Panel cut out
Circular connectors M23, Signal, Bulkhead mounted housing, Rear mounting, Fixing hole 4 x 2.7 mm 		09 15 100 0307	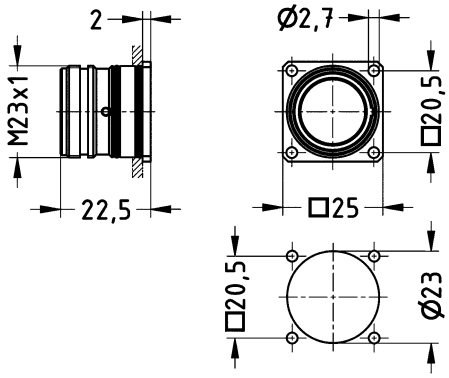 Panel cut out
Circular connectors M23, Signal, Bulkhead mounted housing, Rear mounting, Thread 4 x M2.5 		09 15 100 0305	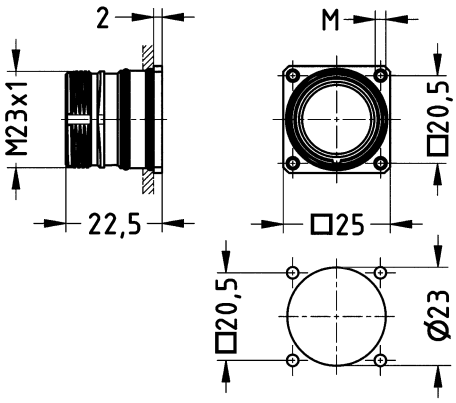 Panel cut out

Identification	Clamping range (mm)	Part number	Drawing (dimensions in mm)
Circular connectors M23, Signal, Bulkhead mounted housing, Rear mounting, Thread 4 x M3 		09 15 100 0306	
Circular connectors M23, Signal, Bulkhead mounted housing, Rear mounting, Thread M25 x 1.5  Not compatible to ComLock		09 15 100 0308	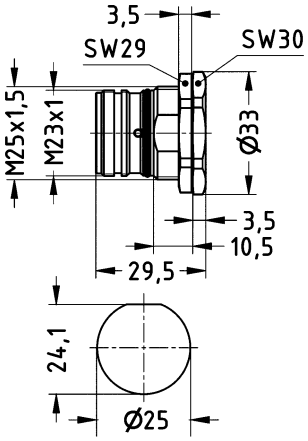 Panel cut out
Circular connectors M23, Signal, Panel feed through housing, Rear mounting 	3 ... 7 7 ... 12 11 ... 17	09 15 100 0309 09 15 100 0310 09 15 100 0311	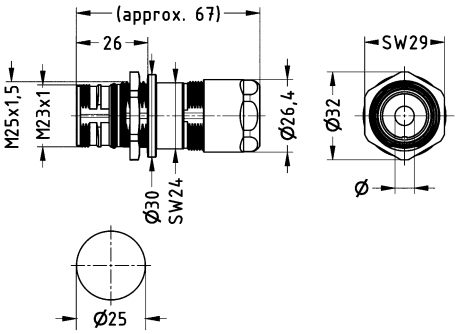 Panel cut out
Circular connectors M23, Signal, Cover, for hoods, With chain (100 mm)  Not compatible to ComLock		09 15 100 9103	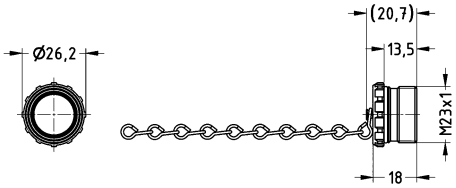

Identification	Clamping range (mm)	Part number	Drawing (dimensions in mm)
Circular connectors M23, Signal, Cover, for bulkhead mounted housings, for cable to cable housing 		09 15 100 9101	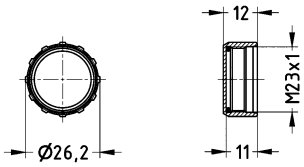
Circular connectors M23, Signal, Cover, for bulkhead mounted housings, for cable to cable housing, With chain (70 mm) 		09 15 100 9102	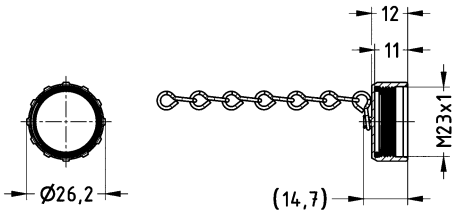

Number of contacts

5+ ⏚

Crimp termination

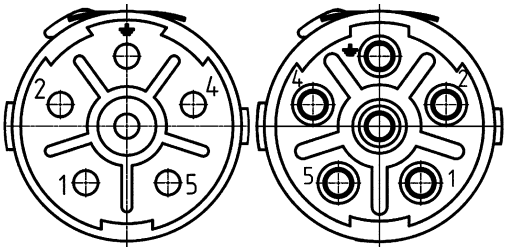

Technical characteristics

Number of contacts	5
Rated current	28 A
Rated voltage	600 V
Rated impulse voltage	4 kV
Pollution degree	3
Insulation resistance	>10^{13} Ω
Limiting temperature	-40 ... +125 °C
Mating cycles	≥500
Conductor cross-section	0.14 ... 4 mm²
Material (insert)	Polyamide (PA)

Technical characteristics

Colour (insert)	Blue
Material flammability class acc. to UL 94	V-0
RoHS	compliant

Specifications and approvals

UL 1977 ECBT2.E235076

Identification	Conductor cross-section (mm²)	Part number Male	Part number Female	Drawing (dimensions in mm)
Circular connectors M23, Power, Inserts, Crimp termination  Please order crimp contacts separately. 6x 2 mm	0.14 ... 4	09 15 606 3001	09 15 606 3101	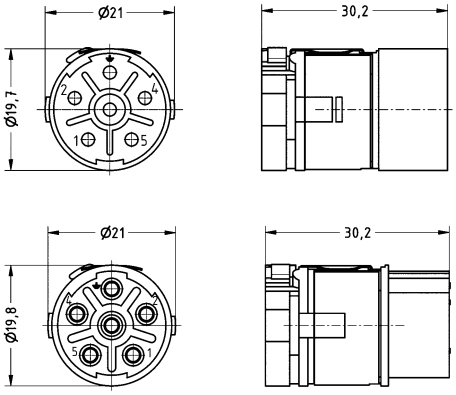

Number of contacts

3+ ⏚

+ 4 additional signal contacts
Crimp termination

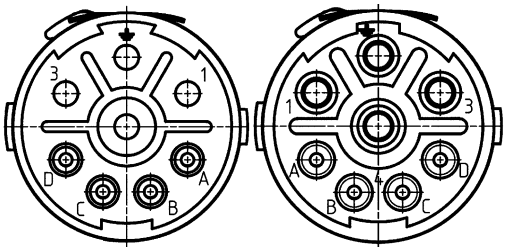

Technical characteristics

Number of contacts	3
Additional contacts	+ 4 additional signal contacts
Rated current	28 A
Rated voltage	600 V
Rated impulse voltage	4 kV
Pollution degree	3
Rated current (signal)	8 A
Rated voltage (signal)	300 V
Rated impulse voltage (signal)	2.5 kV
Pollution degree (signal)	3
Insulation resistance	$>10^{13}$ Ω
Limiting temperature	-40 ... +125 °C

Technical characteristics

Mating cycles	≥500
Conductor cross-section	0.14 ... 4 mm²
Material (insert)	Polyamide (PA)
Colour (insert)	Blue
Material flammability class acc. to UL 94	V-0
RoHS	compliant

Specifications and approvals

UL 1977 ECBT2.E235076

Identification	Conductor cross-section (mm²)	Part number Male	Part number Female	Drawing (dimensions in mm)
Circular connectors M23, Power, Inserts, Crimp termination  Please order crimp contacts separately. 4x 2 mm 4x 1 mm	0.14 ... 4	09 15 608 3001	09 15 608 3101	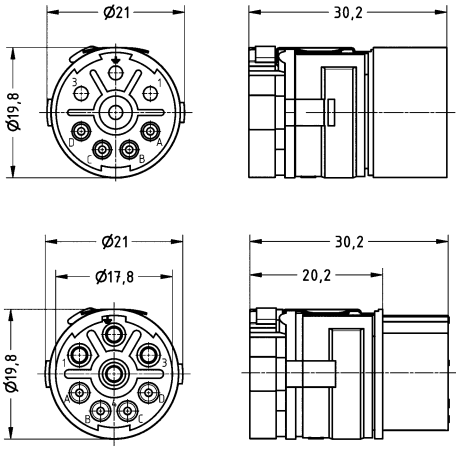

Number of contacts

3+ ⏚

+ 5 additional signal contacts
Crimp termination

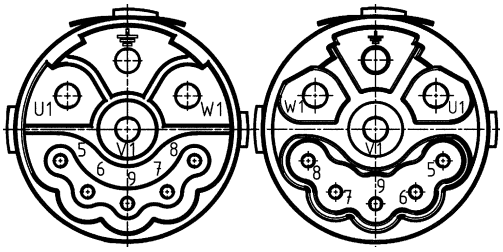

Technical characteristics

Number of contacts	3
Additional contacts	+ 5 additional signal contacts
Rated current	28 A
Rated voltage	630 V
Rated impulse voltage	4 kV
Pollution degree	3
Rated current (signal)	10 A
Rated voltage (signal)	250 V
Rated impulse voltage (signal)	2.5 kV
Pollution degree (signal)	3
Insulation resistance	$>10^{13}$ Ω
Limiting temperature	-40 ... +125 °C

Technical characteristics

Mating cycles	≥500
Conductor cross-section	0.14 ... 4 mm²
Material (insert)	Polyamide (PA)
Colour (insert)	Blue
Material flammability class acc. to UL 94	V-0
RoHS	compliant

Specifications and approvals

UL 1977 ECBT2.E235076

Identification	Conductor cross-section (mm²)	Part number Male	Part number Female	Drawing (dimensions in mm)
Circular connectors M23, Power, Inserts, Mating face (A), Crimp termination  Please order crimp contacts separately. 4x 2 mm 5x 1 mm	0.14 ... 4	09 15 609 3001	09 15 609 3101	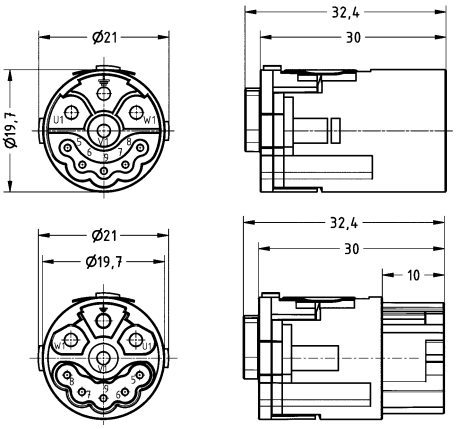

Number of contacts

3+ ⏚

+ 5 additional signal contacts
Crimp termination

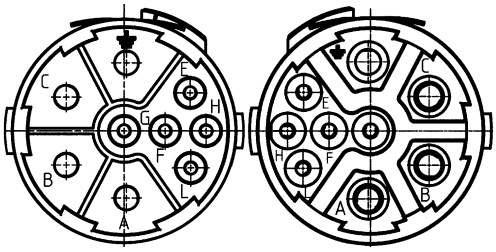

Technical characteristics

Number of contacts	3
Additional contacts	+ 5 additional signal contacts
Rated current	28 A
Rated voltage	630 V
Rated impulse voltage	4 kV
Pollution degree	3
Rated current (signal)	10 A
Rated voltage (signal)	250 V
Rated impulse voltage (signal)	2.5 kV
Pollution degree (signal)	3
Insulation resistance	>10^{13} Ω
Limiting temperature	-40 ... +125 °C

Technical characteristics

Mating cycles	≥500
Conductor cross-section	0.14 ... 4 mm²
Material (insert)	Polyamide (PA)
Colour (insert)	Blue
Material flammability class acc. to UL 94	V-0
RoHS	compliant

Specifications and approvals

UL 1977 ECBT2.E235076

Identification	Conductor cross-section (mm²)	Part number Male	Part number Female	Drawing (dimensions in mm)
Circular connectors M23, Power, Inserts, Mating face (B), Crimp termination  Please order crimp contacts separately. 4x 2 mm 5x 1 mm	0.14 ... 4	09 15 609 3011	09 15 609 3111	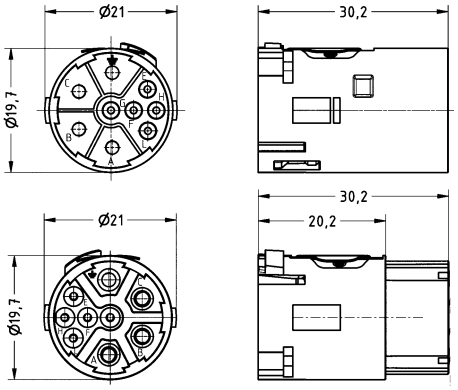

Number of contacts

3+ ⏚

+ 4 additional signal contacts + 4 Data
Crimp termination

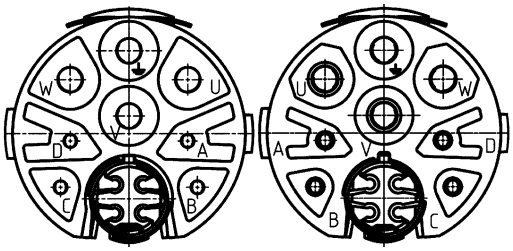

Technical characteristics

Number of contacts	3
Additional contacts	+ 4 additional signal contacts, + 4 Data
Rated current	28 A
Rated voltage	630 V
Rated impulse voltage	4 kV
Pollution degree	3
Rated current (signal)	8 A
Rated voltage (signal)	300 V
Rated impulse voltage (signal)	2.5 kV
Pollution degree (signal)	3
Rated current (data)	2 A
Rated voltage (data)	60 V
Rated impulse voltage (data)	0.5 kV

Technical characteristics

Pollution degree (data)	3
Limiting temperature	-40 ... +125 °C
Mating cycles	≥500
Conductor cross-section	0.08 ... 4 mm²
Material (insert)	Polyamide (PA)
Colour (insert)	Blue
Material flammability class acc. to UL 94	V-0
RoHS	compliant

Specifications and approvals

UL 1977 ECBT2.E235076

Identification	Conductor cross-section (mm²)	Part number Male	Part number Female	Drawing (dimensions in mm)
Circular connectors M23, Hybrid, Inserts, Crimp termination 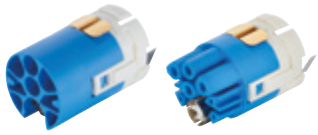 Please order crimp contacts separately. 4x 2 mm 4x 1 mm 4x 0.6 mm	0.08 ... 4	09 15 612 3001	09 15 612 3101	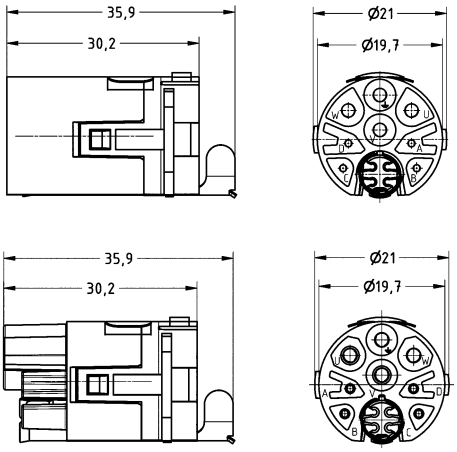

Technical characteristics

Contact resistance	≤3 mΩ
Conductor cross-section	0.08 ... 0.34 mm², 0.14 ... 1 mm², 0.75 ... 2.5 mm², 2.5 ... 4 mm²
Material (contacts)	Copper alloy
Surface (contacts)	Gold plated
RoHS	compliant, compliant with exemption

Specifications and approvals

EN 60664-1
IEC 61984

Identification	Conductor cross-section (mm²)	Part number Male	Part number Female	Drawing (dimensions in mm)
Circular connectors M23, Power, Crimp contact, 0.6 mm, Turned contacts 	0.08 ... 0.34	09 15 600 6191	09 15 600 6291	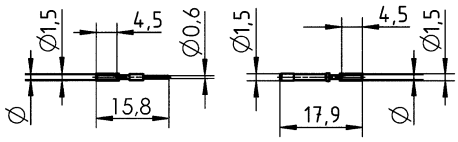 Stripping length 4 mm
Circular connectors M23, Power, Crimp contact, 1 mm, Turned contacts	0.14 ... 1	09 15 600 6101	09 15 600 6201	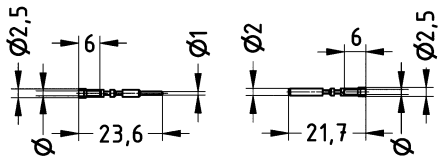 Stripping length 4 mm
Circular connectors M23, Power, Crimp contact, 2 mm, Turned contacts 	0.75 ... 2.5 2.5 ... 4	09 15 600 6121 09 15 600 6122	09 15 600 6221 09 15 600 6222	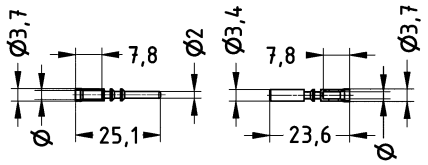 Stripping length 7 mm

Technical characteristics

Limiting temperature	-40 ... +125 °C
Locking type	Screw locking, ComLock rapid locking
Degree of protection acc. to IEC 60529	IP67 / IP69 / IPX9K acc. to ISO 20653, in locked position
Material (hood/housing)	Copper-zinc alloy
Surface (hood/housing)	Nickel plated
Material (seal)	NBR

Technical characteristics

Colour (seal)	Black
RoHS	compliant, compliant with exemption

Specifications and approvals

UL 1977 ECBT2.E235076

Identification	Clamping range (mm)	Part number	Drawing (dimensions in mm)
Circular connectors M23, Power, Bulkhead mounted housing, Straight, Front mounting, Fixing hole 4 x 2.7 mm 		09 15 600 0301	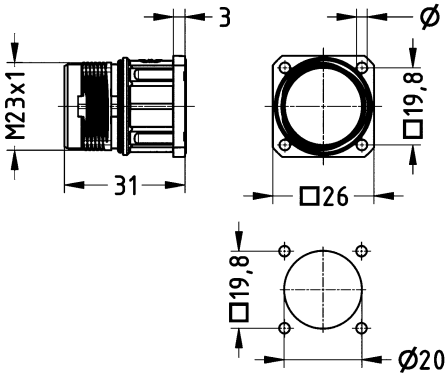 Panel cut out
Circular connectors M23, Power, Bulkhead mounted housing, Straight, Front mounting, Fixing hole 4 x 3.2 mm 		09 15 600 0302	

Identification	Clamping range (mm)	Part number	Drawing (dimensions in mm)
Circular connectors M23, Power, Bulkhead mounted housing, Straight, Front mounting, Thread M20 x 1.5  Not compatible to ComLock		09 15 600 0303	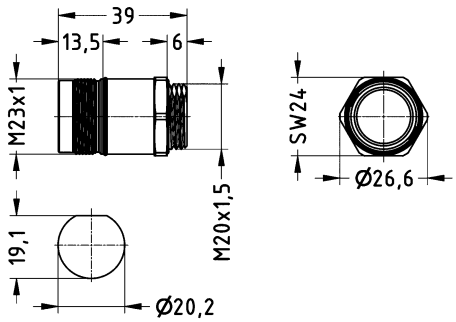 Panel cut out
Circular connectors M23, Power, Bulkhead mounted housing, Straight, Front mounting, Thread M25 x 1.5 		09 15 600 0313	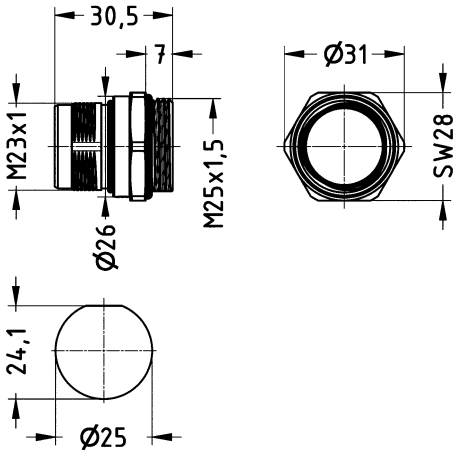 Panel cut out
Circular connectors M23, Power, Bulkhead mounted housing, Straight, Rear mounting, Thread M25 x 1.5 		09 15 600 0308	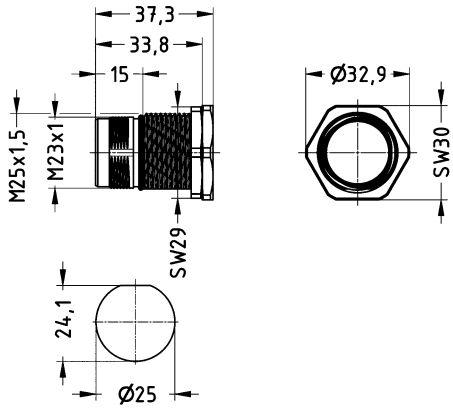 Panel cut out

Identification	Clamping range (mm)	Part number	Drawing (dimensions in mm)
Circular connectors M23, Power, Bulkhead mounted housing, Angled, Rotatable, Fixing hole 4 x 2.7 mm 		09 15 600 0902	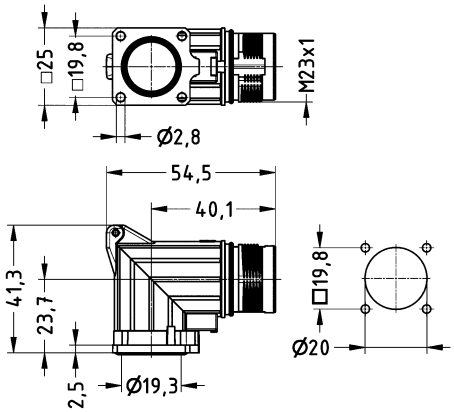 Panel cut out
Circular connectors M23, Power, Bulkhead mounted housing, Angled, Rotatable, Fixing hole 4 x 3.2 mm 		09 15 600 0912	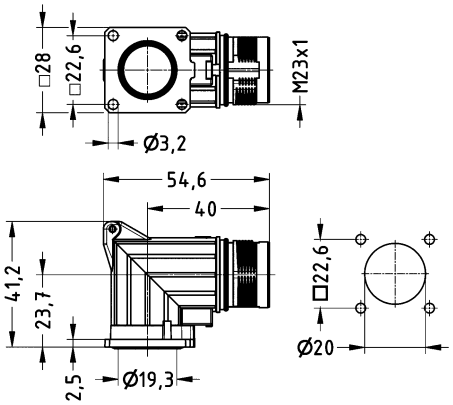 Panel cut out
Circular connectors M23, Power, Panel feed through housing, Rear mounting, EMC version 	7 ... 12 11 ... 17	09 15 600 0310 09 15 600 0311	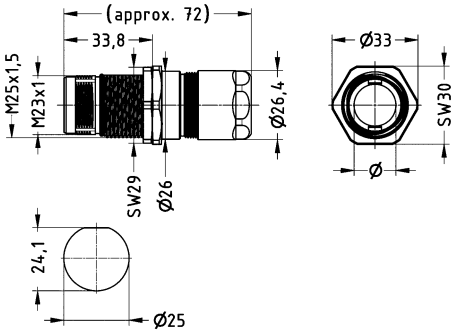 Panel cut out
Circular connectors M23, Power, Cover, for hoods, With chain (100 mm)  Not compatible to ComLock		09 15 600 9103	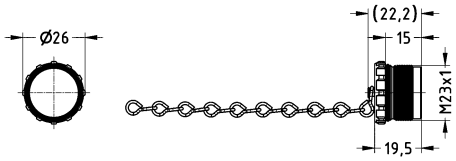

Identification	Clamping range (mm)	Part number	Drawing (dimensions in mm)
Circular connectors M23, Power, Cover, for bulkhead mounted housings, for cable to cable housing, With chain (70 mm) 		09 15 600 9102	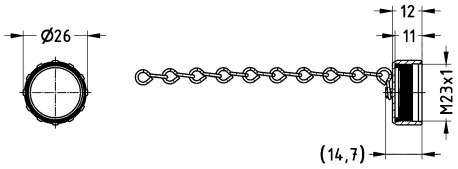

Contents | Page

Number of contacts

2+ ⏚

Unshielded

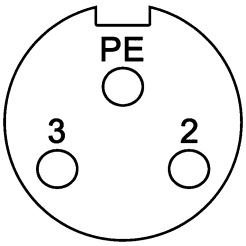

Technical characteristics

Number of contacts	2
Rated current	10 A
Rated voltage conductor-earth	230 V
Rated voltage conductor-conductor	400 V
Rated impulse voltage	4.8 kV
Pollution degree	3
Insulation resistance	>10^8 Ω
Contact resistance	≤10 mΩ
Mating cycles	≥100
Locking type	Screw locking
Conductor length	50 cm
Degree of protection acc. to IEC 60529	IP67

Technical characteristics

Conductor cross-section	1 mm²
Conductor cross-section	AWG 18
Material (insert)	Thermoplastic polyurethane (TPU)
Material (hood/housing)	Copper-zinc alloy
Material (contacts)	Brass
Surface (contacts)	Gold plated
RoHS	compliant with exemption

Specifications and approvals

CE

Identification	Conductor cross-section (mm²)	Part number Female	Drawing (dimensions in mm)
Circular connectors 7/8”, Panel feed through, With conductors, for front mounting, Unshielded 	1	21 04 316 2301	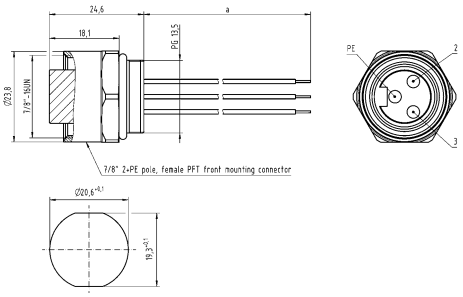 Panel cut out

Panel feed through

Number of contacts

4

Unshielded

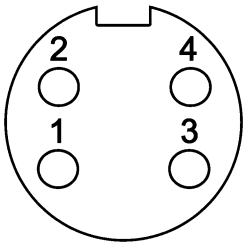

Technical characteristics

Number of contacts	4
Rated current	10 A
Rated voltage conductor-earth	230 V
Rated voltage conductor-conductor	400 V
Rated impulse voltage	4.8 kV
Pollution degree	3
Insulation resistance	>10^8 Ω
Contact resistance	≤10 mΩ
Mating cycles	≥100
Locking type	Screw locking
Conductor length	50 cm
Degree of protection acc. to IEC 60529	IP67

Technical characteristics

Conductor cross-section	1 mm²
Conductor cross-section	AWG 18
Material (insert)	Thermoplastic polyurethane (TPU)
Material (hood/housing)	Copper-zinc alloy
Material (contacts)	Brass
Surface (contacts)	Gold plated
RoHS	compliant with exemption

Specifications and approvals

CE

Identification	Conductor cross-section (mm²)	Part number Female	Drawing (dimensions in mm)
Circular connectors 7/8”, Panel feed through, With conductors, for front mounting, Unshielded 	1	21 04 316 2401	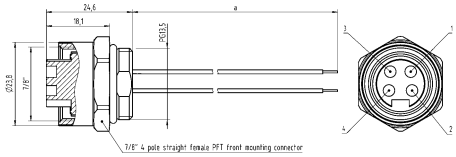 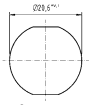 Panel cut out

Panel feed through

Number of contacts

4+

Unshielded

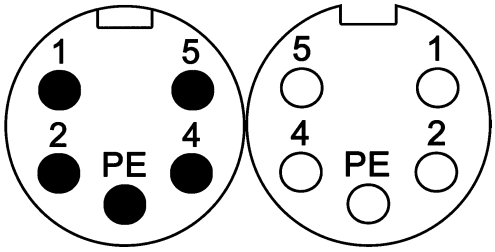

Technical characteristics

Number of contacts	4
Rated current	10 A
Rated voltage conductor-earth	230 V
Rated voltage conductor-conductor	400 V
Rated impulse voltage	4.8 kV
Pollution degree	3
Insulation resistance	>10^8 Ω
Contact resistance	≤10 mΩ
Mating cycles	≥100
Locking type	Screw locking
Conductor length	50 cm
Degree of protection acc. to IEC 60529	IP67

Technical characteristics

Conductor cross-section	1 mm²
Conductor cross-section	AWG 18
Material (insert)	Thermoplastic polyurethane (TPU)
Material (hood/housing)	Copper-zinc alloy
Material (contacts)	Brass
Surface (contacts)	Gold plated
RoHS	compliant with exemption

Specifications and approvals

CE

Identification	Conductor cross section (mm²)	Part number Male	Part number Female	Drawing (dimensions in mm)
Circular connectors 7/8”, Panel feed through, With conductors, for front mounting, Unshielded 	1	21 34 740 0571 005	21 04 316 2501	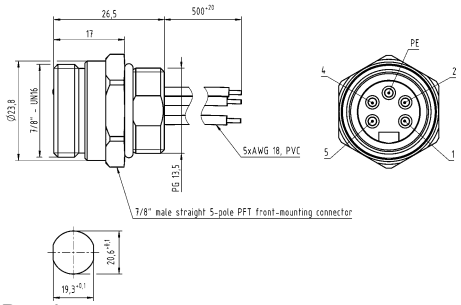 Panel cut out 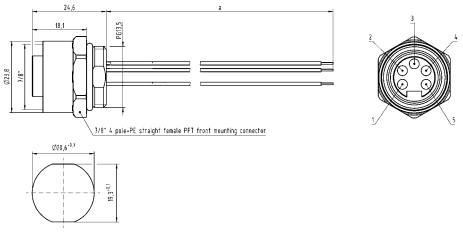 Panel cut out

Contents | Page

Panel feed through

HARAX

Number of contacts

2+ ⏚

HARAX® connection technology
Unshielded

Technical characteristics

Number of contacts	2
Rated current	16 A
Rated voltage conductor-earth	230 V
Rated voltage conductor-conductor	400 V
Rated impulse voltage	4 kV
Pollution degree	3
Insulation resistance	>10^8 Ω
Contact resistance	≤10 mΩ
Wire outer diameter	≤2.8 mm
Conductor length	50 cm
Degree of protection acc. to IEC 60529	IP67
Conductor cross-section	0.75 ... 1.5 mm²
Conductor cross-section	AWG 18 ... AWG 16

Technical characteristics

Cable diameter	6 ... 9 mm
Material (insert)	Polyamide (PA), Thermoplastic polyurethane (TPU)
Material (hood/housing)	Polyamide (PA), Thermoplastic polyurethane (TPU)
Material (contacts)	Copper alloy
Surface (contacts)	Gold plated
RoHS	compliant

Specifications and approvals

UL 1977 ECBT2.E102079
CSA-C22.2 No. 182.3 ECBT8.E102079

Identification	Conductor cross-section (mm²)	Size	Part number	Drawing (dimensions in mm)
HARAX®, Panel feed through, With faston blades, for front mounting, *HARAX*® connection technology, Unshielded 	0.75 ... 1.5	Pg 13.5	21 01 130 3013	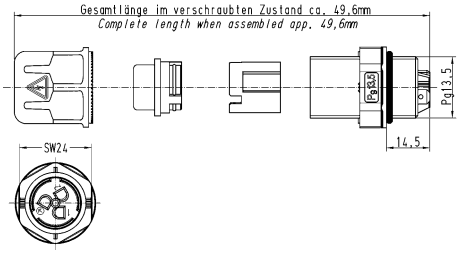 Contact arrangement (view from mating side)
HARAX®, Panel feed through, With solder termination, for front mounting, *HARAX*® connection technology, Unshielded 	0.75 ... 1.5	Pg 13.5	21 01 130 3023	
HARAX®, Panel feed through, With conductors, for front mounting, *HARAX*® connection technology, Unshielded 	0.75 ... 1.5	Pg 13.5	21 01 130 3233	

Panel feed through

Number of contacts

3

HARAX® connection technology
Unshielded

Technical characteristics

Number of contacts	3
Rated current	16 A
Rated voltage conductor-earth	230 V
Rated voltage conductor-conductor	400 V
Rated impulse voltage	4 kV
Pollution degree	3
Insulation resistance	>10^8 Ω
Contact resistance	≤10 mΩ
Wire outer diameter	≤2.8 mm
Conductor length	50 cm
Degree of protection acc. to IEC 60529	IP67
Conductor cross-section	0.75 ... 1.5 mm²
Conductor cross-section	AWG 18 ... AWG 16

Technical characteristics

Cable diameter	6 ... 9 mm
Material (insert)	Polyamide (PA), Thermoplastic polyurethane (TPU)
Material (hood/housing)	Polyamide (PA), Thermoplastic polyurethane (TPU)
Material (contacts)	Copper alloy
Surface (contacts)	Gold plated
RoHS	compliant

Specifications and approvals

UL 1977 ECBT2.E102079
CSA-C22.2 No. 182.3 ECBT8.E102079

Identification	Conductor cross-section (mm²)	Size	Part number	Drawing (dimensions in mm)
HARAX®, Panel feed through, With faston blades, for front mounting, *HARAX*® connection technology, Unshielded 	0.75 ... 1.5	Pg 13.5	21 01 130 1013	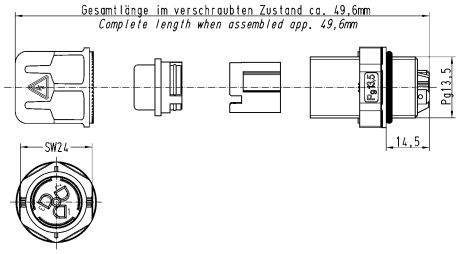 Contact arrangement (view from mating side)
HARAX®, Panel feed through, With solder termination, for front mounting, *HARAX*® connection technology, Unshielded 	0.75 ... 1.5	Pg 13.5	21 01 130 1023	
HARAX®, Panel feed through, With conductors, for front mounting, *HARAX*® connection technology, Unshielded 	0.75 ... 1.5	Pg 13.5	21 01 130 1223	

Panel feed through

Number of contacts

3+ ⏚

HARAX® connection technology
Unshielded

Technical characteristics

Number of contacts	3
Rated current	16 A
Rated voltage conductor-earth	230 V
Rated voltage conductor-conductor	400 V
Rated impulse voltage	4 kV
Pollution degree	3
Insulation resistance	>10^8 Ω
Contact resistance	≤10 mΩ
Wire outer diameter	≤2.8 mm
Conductor length	50 cm
Degree of protection acc. to IEC 60529	IP67
Conductor cross-section	0.75 ... 1.5 mm²
Conductor cross-section	AWG 18 ... AWG 16

Technical characteristics

Cable diameter	6 ... 9 mm
Material (insert)	Polyamide (PA), Thermoplastic polyurethane (TPU)
Material (hood/housing)	Polyamide (PA), Thermoplastic polyurethane (TPU)
Material (contacts)	Copper alloy
Surface (contacts)	Gold plated
RoHS	compliant

Specifications and approvals

UL 1977 ECBT2.E102079
CSA-C22.2 No. 182.3 ECBT8.E102079

Identification	Conductor cross-section (mm²)	Size	Part number	Drawing (dimensions in mm)
HARAX®, Panel feed through, With solder termination, for front mounting, *HARAX*® connection technology, Unshielded 	0.75 ... 1.5 0.75 ... 1.5	M20 Pg 13.5	21 01 141 3023 21 01 140 3023	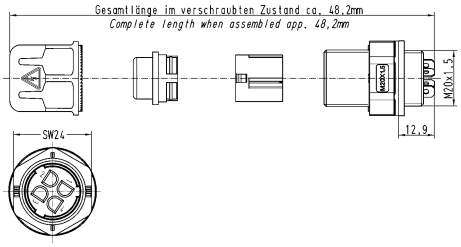 Contact arrangement (view from mating side)
HARAX®, Panel feed through, With conductors, for front mounting, *HARAX*® connection technology, Unshielded 	0.75 ... 1.5	M20	21 01 141 3333	

Panel feed through

Number of contacts

4

HARAX® connection technology
Unshielded

Technical characteristics

Number of contacts	4
Rated current	16 A
Rated voltage conductor-earth	230 V
Rated voltage conductor-conductor	400 V
Rated impulse voltage	4 kV
Pollution degree	3
Insulation resistance	>10^8 Ω
Contact resistance	≤10 mΩ
Wire outer diameter	≤2.8 mm
Conductor length	50 cm
Degree of protection acc. to IEC 60529	IP67
Conductor cross-section	0.75 ... 1.5 mm²
Conductor cross-section	AWG 18 ... AWG 16

Technical characteristics

Cable diameter	6 ... 9 mm
Material (insert)	Polyamide (PA), Thermoplastic polyurethane (TPU)
Material (hood/housing)	Polyamide (PA), Thermoplastic polyurethane (TPU)
Material (contacts)	Copper alloy
Surface (contacts)	Gold plated
RoHS	compliant

Specifications and approvals

UL 1977 ECBT2.E102079
CSA-C22.2 No. 182.3 ECBT8.E102079

Identification	Conductor cross-section (mm²)	Size	Part number	Drawing (dimensions in mm)
HARAX®, Panel feed through, With solder termination, for front mounting, *HARAX*® connection technology, Unshielded 	0.75 ... 1.5 0.75 ... 1.5	M20 Pg 13.5	21 01 141 1023 21 01 140 1023	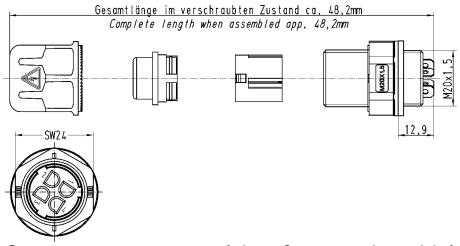 Contact arrangement (view from mating side)
HARAX®, Panel feed through, With conductors, for front mounting, *HARAX*® connection technology, Unshielded 	0.75 ... 1.5 0.75 ... 1.5	M20 Pg 13.5	21 01 141 1323 21 01 140 1323	

Technical characteristics

RoHS	compliant with exemption, compliant

Identification	Size	Part number	Drawing (dimensions in mm)
HARAX®, Lock nut, Thermoplastic 	M20 Pg 13.5	21 01 000 0009 21 01 000 0007	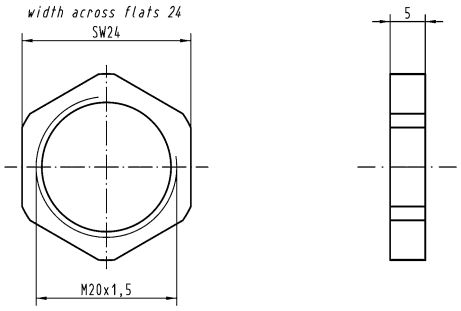 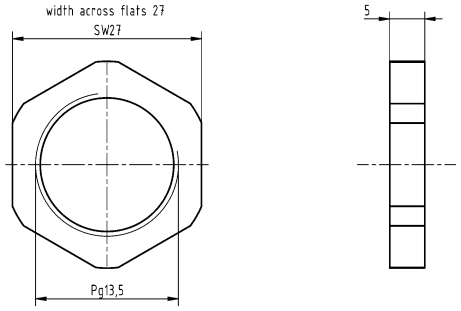
HARAX®, Lock nut, Metal 	Pg 13.5	21 01 000 0039	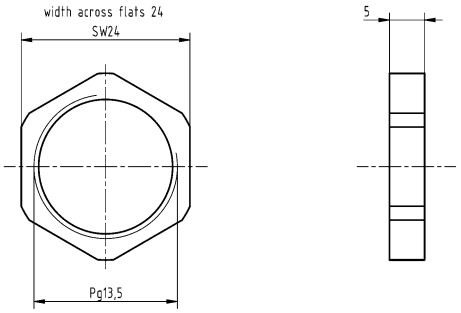

Contents | Page

Number of contacts

3

HARAX® connection technology
Unshielded

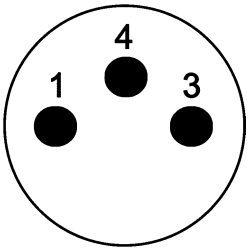

Technical characteristics

Number of contacts	3
Rated current	2 A
Rated voltage	32 V
Rated impulse voltage	1.5 kV
Pollution degree	3
Insulation resistance	>10^8 Ω
Contact resistance	≤10 mΩ
Mating cycles	≥100
Wire outer diameter	≤1 mm
Locking type	Screw locking
Degree of protection acc. to IEC 60529	IP67, in locked position
Conductor cross-section	0.1 ... 0.14 mm²

Technical characteristics

Conductor cross-section	AWG 27 ... AWG 26
Cable diameter	1.9 ... 3.5 mm
Tightening torque	0.4 Nm
Material (insert)	Polyamide (PA)
Material (hood/housing)	Polyamide (PA), Zinc die-cast
Material (contacts)	Copper alloy
Surface (contacts)	Gold plated
RoHS	compliant with exemption

Specifications and approvals

IEC 61076-2-104

Identification	Conductor cross-section (mm²)	Part number Male	Drawing (dimensions in mm)
Circular connectors M8, M8-XS, Cable connector, Straight, *HARAX*® connection technology, Unshielded 	0.1 ... 0.14	21 02 159 1305	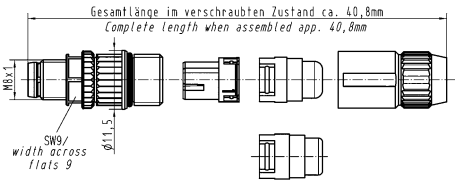

Number of contacts

3

HARAX® connection technology
Unshielded

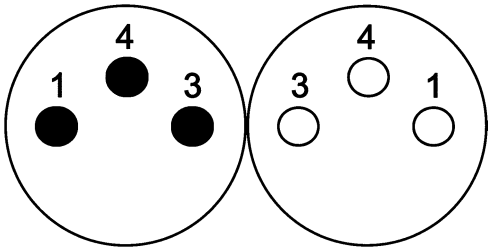

Technical characteristics

Number of contacts	3
Rated current	4 A
Rated voltage	32 V
Rated impulse voltage	1.5 kV
Pollution degree	3
Insulation resistance	>10^8 Ω
Contact resistance	≤10 mΩ
Mating cycles	≥100
Wire outer diameter	≤1.6 mm
Locking type	Screw locking
Degree of protection acc. to IEC 60529	IP67, in locked position
Conductor cross-section	0.14 ... 0.34 mm²
Conductor cross-section	AWG 26 ... AWG 22

Technical characteristics

Cable diameter	2.5 ... 5.1 mm
Tightening torque	0.4 Nm
Material (insert)	Polyamide (PA)
Material (hood/housing)	Polyamide (PA), Zinc die-cast
Material (contacts)	Copper alloy
Surface (contacts)	Gold plated
RoHS	compliant

Specifications and approvals

IEC 61076-2-104
UL 1977 ECBT2.E102079
CSA-C22.2 No. 182.3 ECBT8.E102079

Identification	Conductor cross-section (mm²)	Part number Male	Part number Female	Drawing (dimensions in mm)
Circular connectors M8, M8-S, Cable connector, Straight, *HARAX*® connection technology, Unshielded 	0.14 ... 0.34	21 02 151 1305	21 02 151 2305	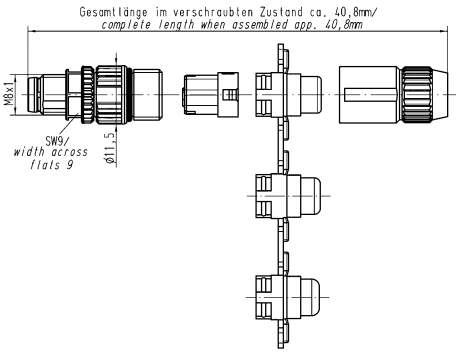 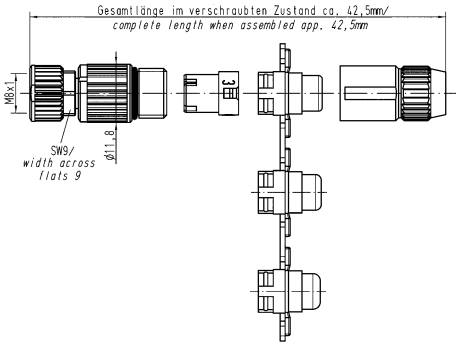

Number of contacts

3

Screw termination
Unshielded

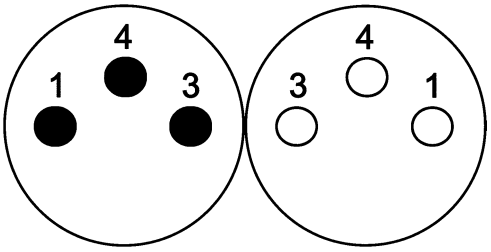

Technical characteristics

Number of contacts	3
Rated current	4 A
Rated voltage	60 V
Rated impulse voltage	1.5 kV
Pollution degree	3
Insulation resistance	>10^8 Ω
Contact resistance	≤10 mΩ
Mating cycles	≥100
Locking type	Screw locking
Degree of protection acc. to IEC 60529	IP67, in locked position
Conductor cross-section	0.09 ... 0.5 mm²
Conductor cross-section	AWG 28 ... AWG 20

Technical characteristics

Cable diameter	4 ... 5.5 mm
Tightening torque	0.4 Nm
Material (insert)	Polyamide (PA)
Material (hood/housing)	Polyamide (PA), Copper-zinc alloy
Material (contacts)	Brass
Surface (contacts)	Gold plated
RoHS	compliant with exemption

Specifications and approvals

IEC 61076-2-104

Identification	Conductor cross-section (mm²)	Part number Male	Part number Female	Drawing (dimensions in mm)
Circular connectors M8, Cable connector, Straight, Screw termination, Unshielded 	0.09 ... 0.5	21 02 359 1301	21 02 359 2301	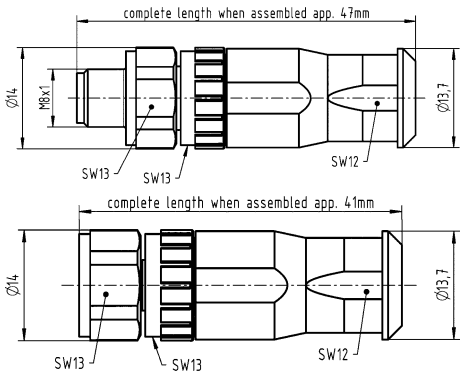
Circular connectors M8, Cable connector, Angled, Screw termination, Unshielded 	0.09 ... 0.5	21 02 359 3301	21 02 359 4301	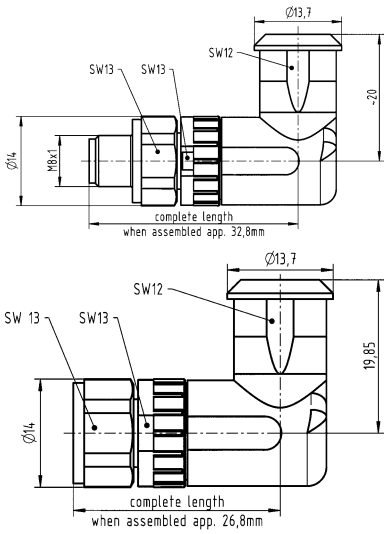

Number of contacts

3

Screw termination
Shielded

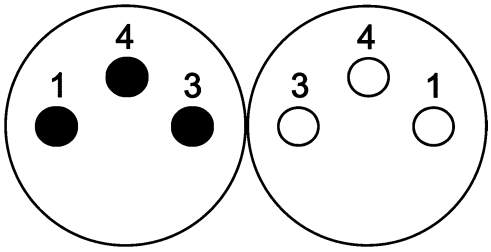

Technical characteristics

Number of contacts	3
Rated current	4 A
Rated voltage	60 V
Rated impulse voltage	1.5 kV
Pollution degree	3
Insulation resistance	>10^8 Ω
Contact resistance	≤10 mΩ
Mating cycles	≥100
Locking type	Screw locking
Degree of protection acc. to IEC 60529	IP67, in locked position
Conductor cross-section	0.09 ... 0.5 mm²
Conductor cross-section	AWG 28 ... AWG 20

Technical characteristics

Cable diameter	4 ... 5.5 mm
Tightening torque	0.4 Nm
Material (insert)	Polyamide (PA)
Material (hood/housing)	Copper-zinc alloy
Material (contacts)	Brass
Surface (contacts)	Gold plated
RoHS	compliant with exemption

Specifications and approvals

IEC 61076-2-104

Identification	Conductor cross-section (mm²)	Part number Male	Part number Female	Drawing (dimensions in mm)
Circular connectors M8, Cable connector, Straight, Screw termination, Shielded 	0.09 ... 0.5	21 02 369 1301	21 02 369 2301	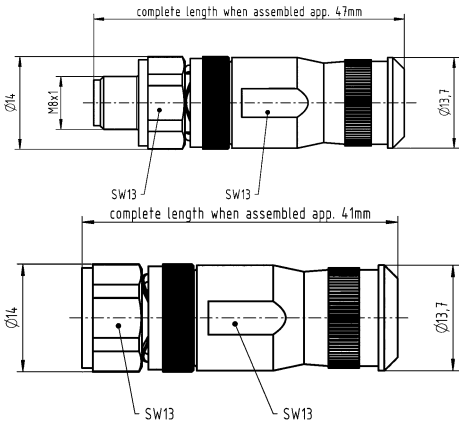

Number of contacts

4

HARAX® connection technology
Unshielded

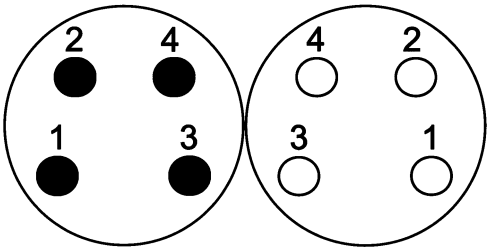

Technical characteristics

Number of contacts	4
Rated current	4 A
Rated voltage	32 V
Rated impulse voltage	1.5 kV
Pollution degree	3
Insulation resistance	>10^8 Ω
Contact resistance	≤10 mΩ
Mating cycles	≥100
Wire outer diameter	≤1.6 mm
Locking type	Screw locking
Degree of protection acc. to IEC 60529	IP67, in locked position
Conductor cross-section	0.14 ... 0.34 mm²
Conductor cross-section	AWG 26 ... AWG 22

Technical characteristics

Cable diameter	2.5 ... 5.1 mm
Tightening torque	0.4 Nm
Material (insert)	Polyamide (PA)
Material (hood/housing)	Polyamide (PA), Zinc die-cast
Material (contacts)	Copper alloy
Surface (contacts)	Gold plated
RoHS	compliant

Specifications and approvals

IEC 61076-2-104
UL 1977 ECBT2.E102079
CSA-C22.2 No. 182.3 ECBT8.E102079

Identification	Conductor cross-section (mm²)	Part number Male	Part number Female	Drawing (dimensions in mm)
Circular connectors M8, M8-S, Cable connector, Straight, *HARAX*® connection technology, Unshielded 	0.14 ... 0.34	21 02 151 1405	21 02 151 2405	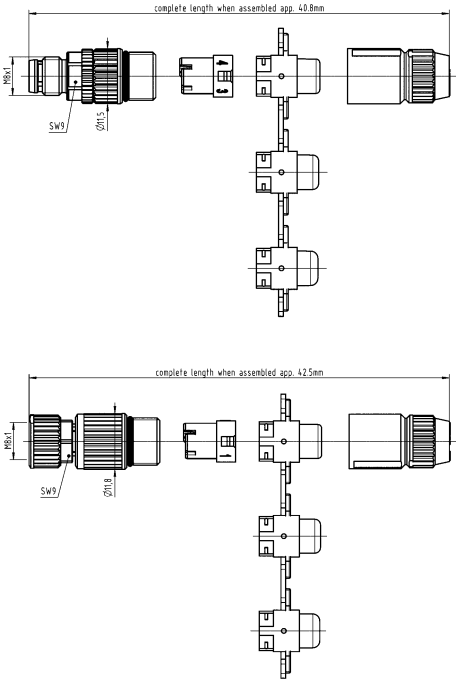

Number of contacts

4

Screw termination
Unshielded

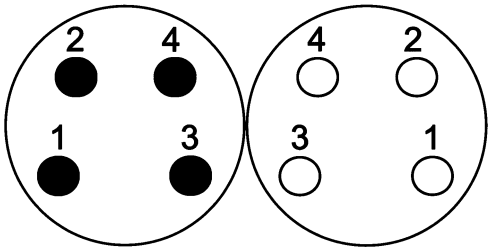

Technical characteristics

Number of contacts	4
Rated current	4 A
Rated voltage	30 V
Rated impulse voltage	1.5 kV
Pollution degree	3
Insulation resistance	>10^8 Ω
Contact resistance	≤10 mΩ
Mating cycles	≥100
Locking type	Screw locking
Degree of protection acc. to IEC 60529	IP67, in locked position
Conductor cross-section	0.09 ... 0.5 mm²
Conductor cross-section	AWG 28 ... AWG 20

Technical characteristics

Cable diameter	4 ... 5.5 mm
Tightening torque	0.4 Nm
Material (insert)	Polyamide (PA)
Material (hood/housing)	Polyamide (PA), Copper-zinc alloy
Material (contacts)	Brass
Surface (contacts)	Gold plated
RoHS	compliant with exemption

Specifications and approvals

IEC 61076-2-104

Identification	Conductor cross-section (mm²)	Part number Male	Part number Female	Drawing (dimensions in mm)
Circular connectors M8, Cable connector, Straight, Screw termination, Unshielded 	0.09 ... 0.5	21 02 359 1401	21 02 359 2401	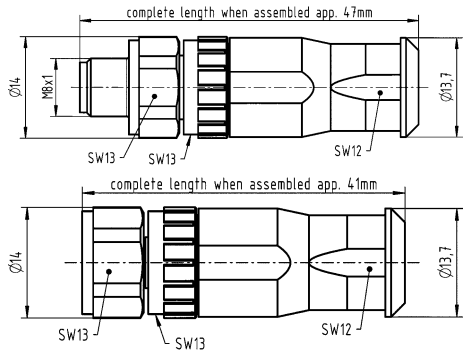
Circular connectors M8, Cable connector, Angled, Screw termination, Unshielded 	0.09 ... 0.5	21 02 359 3401	21 02 359 4401	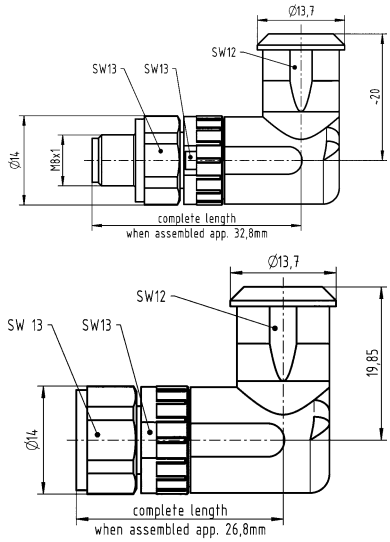

Number of contacts

4

Screw termination
Shielded

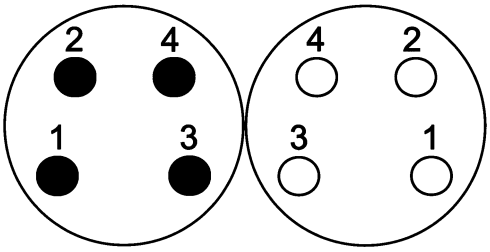

Technical characteristics

Number of contacts	4
Rated current	4 A
Rated voltage	30 V
Rated impulse voltage	1.5 kV
Pollution degree	3
Insulation resistance	>10^8 Ω
Contact resistance	≤10 mΩ
Mating cycles	≥100
Locking type	Screw locking
Degree of protection acc. to IEC 60529	IP67, in locked position
Conductor cross-section	0.09 ... 0.5 mm²
Conductor cross-section	AWG 28 ... AWG 20

Technical characteristics

Cable diameter	4 ... 5.5 mm
Tightening torque	0.4 Nm
Material (insert)	Polyamide (PA)
Material (hood/housing)	Copper-zinc alloy
Material (contacts)	Brass
Surface (contacts)	Gold plated
RoHS	compliant with exemption

Specifications and approvals

IEC 61076-2-104

Identification	Conductor cross-section (mm²)	Part number Male	Part number Female	Drawing (dimensions in mm)
Circular connectors M8, Cable connector, Straight, Screw termination, Shielded 	0.09 ... 0.5	21 02 369 1401	21 02 369 2401	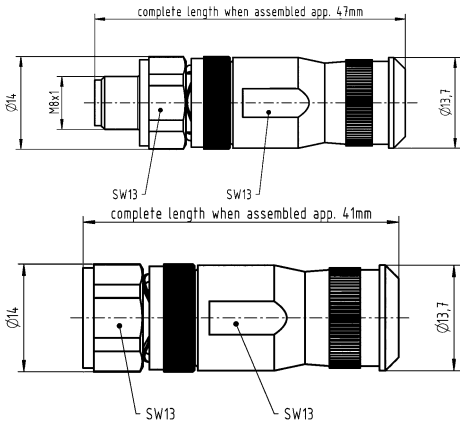

Number of contacts

4

HARAX® connection technology
Shielded

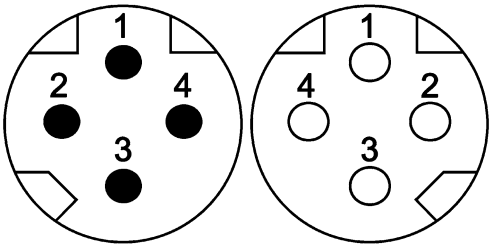

Technical characteristics

Number of contacts	4
Rated current	4 A
Rated voltage	60 V
Rated impulse voltage	1.5 kV
Pollution degree	3
Insulation resistance	>10^8 Ω
Contact resistance	≤10 mΩ
Mating cycles	≥100
Locking type	Screw locking, PushPull
Degree of protection acc. to IEC 60529	IP65 / IP67, in locked position
Cable diameter	6.2 ... 6.8 mm

Technical characteristics

Transmission characteristics	Cat. 5, Class D up to 100 MHz
Tightening torque	0.4 Nm
Material (insert)	Polyamide (PA)
Material (hood/housing)	Polyamide (PA), Zinc die-cast
Material (contacts)	Copper alloy
Surface (contacts)	Gold plated

Specifications and approvals

IEC 61076-2-114

Identification	Part number Male	Part number Female	Drawing (dimensions in mm)
Circular connectors M8, Cable connector, Straight, *HARAX*® connection technology, Shielded, Screw locking 	21 02 185 1405	21 02 185 2405	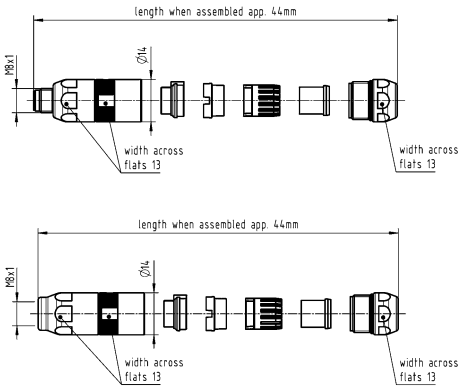
Circular connectors M8, Cable connector, Straight, *HARAX*® connection technology, Shielded, PushPull locking 	21 02 185 1430		

Number of contacts

4

HARAX® connection technology
Shielded

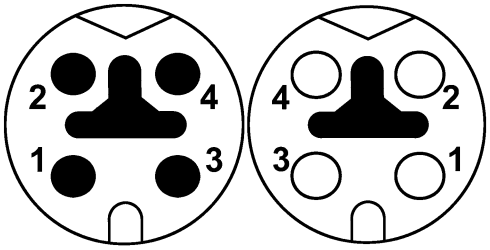

Technical characteristics

Number of contacts	4
Rated current	4 A
Rated voltage	60 V
Rated impulse voltage	1.5 kV
Pollution degree	3
Insulation resistance	>10^8 Ω
Contact resistance	≤10 mΩ
Mating cycles	≥100
Locking type	Screw locking, PushPull
Degree of protection acc. to IEC 60529	IP65 / IP67, in locked position
Cable diameter	6.2 ... 6.8 mm

Technical characteristics

Transmission characteristics	Cat. 5, Class D up to 100 MHz
Tightening torque	0.4 Nm
Material (insert)	Polyamide (PA)
Material (hood/housing)	Polyamide (PA), Zinc die-cast
Material (contacts)	Copper alloy
Surface (contacts)	Gold plated

Specifications and approvals

IEC 61076-2-114

Identification	Part number Male	Part number Female	Drawing (dimensions in mm)
Circular connectors M8, Cable connector, Straight, *HARAX*® connection technology, Shielded, Screw locking 	21 02 145 1405	21 02 145 2405	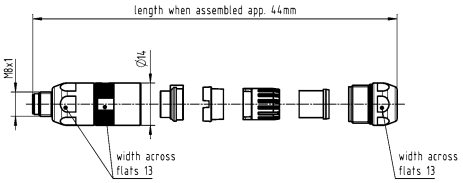 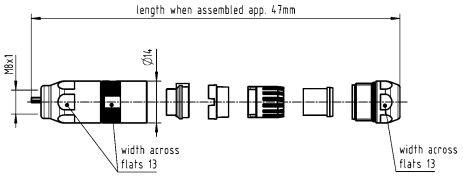
Circular connectors M8, Cable connector, Straight, *HARAX*® connection technology, Shielded, PushPull locking 	21 02 145 1430		

Technical characteristics

Material (accessories)	Thermoplastic

Technical characteristics

Colour (accessories)	Black
RoHS	compliant

Identification	Part number	Drawing (dimensions in mm)
Circular connectors M8, Cap, for male inserts, with cord 	21 41 000 0003	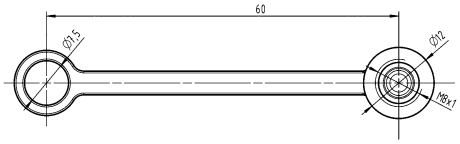
Circular connectors M8, Cap, for female inserts, with cord 	21 41 000 0004	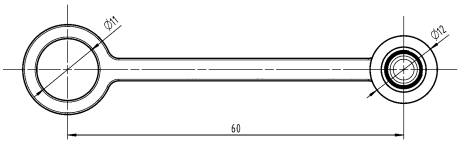

Technical characteristics

Material (accessories)	Thermoplastic

Technical characteristics

Colour (accessories)	Black, Grey, Transparent
RoHS	compliant

Identification	Cable diameter (mm)	Part number	Drawing (dimensions in mm)
Circular connectors M8, M8-XS, Seal, Black 	1.9 ... 2.5	21 01 010 2016	
Circular connectors M8, M8-XS, Seal, Grey 	2.5 ... 3.5	21 01 010 2008	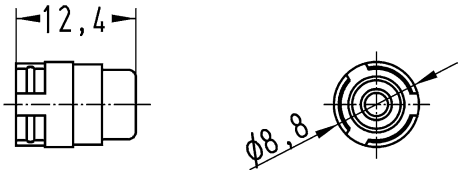
Circular connectors M8, M8-XS, Seal, Transparent 	4.2 ... 5.4	21 01 010 2005	
Circular connectors M8, M8-S, Set of seals 	2.5 ... 5.1	21 01 010 2013	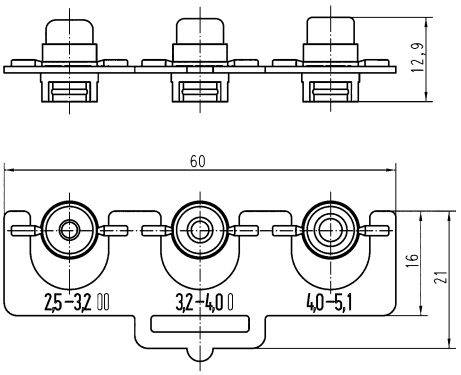

Contents | Page

Number of contacts

3

HARAX® connection technology
Unshielded

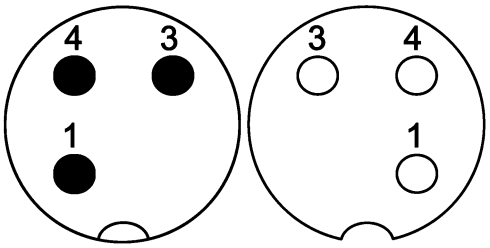

Technical characteristics

Number of contacts	3
Rated current	4 A
Rated voltage	32 V
Rated impulse voltage	1.5 kV
Pollution degree	3
Insulation resistance	>10^8 Ω
Contact resistance	≤10 mΩ
Mating cycles	≥100
Wire outer diameter	≤1.6 mm
Locking type	Screw locking
Degree of protection acc. to IEC 60529	IP65 / IP67, when mated
Conductor cross-section	0.14 ... 0.34 mm²
Conductor cross-section	AWG 26 ... AWG 22

Technical characteristics

Cable diameter	2.9 ... 5.1 mm
Tightening torque	0.6 Nm
Material (insert)	Polyamide (PA)
Material (hood/housing)	Polyamide (PA), Zinc die-cast
Material (contacts)	Brass
Surface (contacts)	Gold plated
RoHS	compliant

Specifications and approvals

IEC 61076-2-101
UL 1977 ECBT2.E102079
CSA-C22.2 No. 182.3 ECBT8.E102079

Identification	Conductor cross-section (mm²)	Part number Male	Part number Female	Drawing (dimensions in mm)
Circular connectors M12, M12-S, Cable connector, Straight, *HARAX*® connection technology, Unshielded 	0.14 ... 0.34	21 03 111 1305	21 03 111 2305	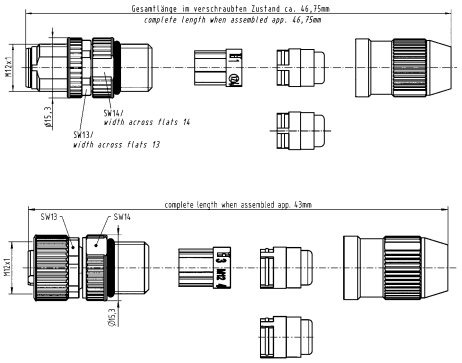

Number of contacts

3

HARAX® connection technology
Unshielded

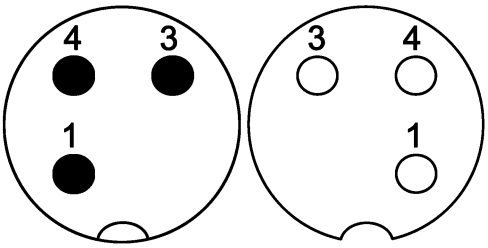

Technical characteristics

Number of contacts	3
Rated current	6 A
Rated voltage	50 V
Rated impulse voltage	1.5 kV
Pollution degree	3
Insulation resistance	>10^8 Ω
Contact resistance	≤10 mΩ
Mating cycles	≥100
Wire outer diameter	≤2.6 mm
Locking type	Screw locking
Degree of protection acc. to IEC 60529	IP65 / IP67, when mated
Conductor cross-section	0.34 ... 0.75 mm²
Conductor cross-section	AWG 22 ... AWG 18

Technical characteristics

Cable diameter	6 ... 8 mm
Tightening torque	0.6 Nm
Material (insert)	Polyamide (PA)
Material (hood/housing)	Polyamide (PA), Zinc die-cast
Material (contacts)	Brass
Surface (contacts)	Gold plated
RoHS	compliant with exemption

Specifications and approvals

IEC 61076-2-101
UL 1977 ECBT2.E102079
CSA-C22.2 No. 182.3 ECBT8.E102079

Identification	Conductor cross-section (mm²)	Part number Male	Part number Female	Drawing (dimensions in mm)
Circular connectors M12, M12-L, Cable connector, Straight, Deviating contact configuration, 1, 3, 4, *HARAX*® connection technology, Unshielded 	0.34 ... 0.75	21 03 212 1306	21 03 212 2306	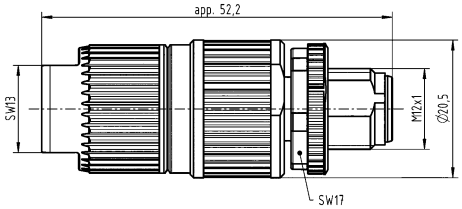 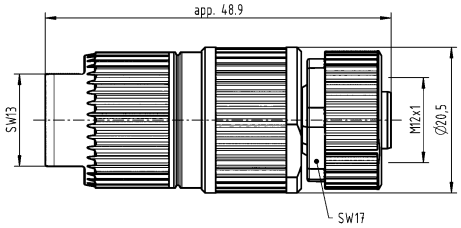
Circular connectors M12, M12-L, Cable connector, Straight, Deviating contact configuration, 3, 4, 5, *HARAX*® connection technology, Unshielded 	0.34 ... 0.75	21 03 212 1400	21 03 212 2400	

Number of contacts

4

HARAX® connection technology
Unshielded

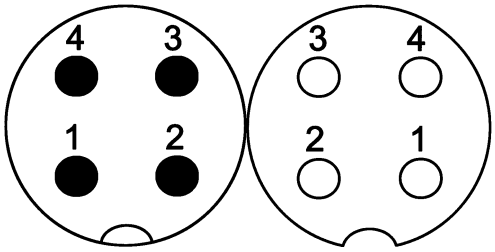

Technical characteristics

Number of contacts	4
Rated current	4 A
Rated voltage	32 V
Rated impulse voltage	1.5 kV
Pollution degree	3
Insulation resistance	>10^8 Ω
Contact resistance	≤10 mΩ
Mating cycles	≥100
Wire outer diameter	≤1.6 mm
Locking type	Screw locking
Degree of protection acc. to IEC 60529	IP65 / IP67, when mated
Conductor cross-section	0.14 ... 0.34 mm²
Conductor cross-section	AWG 26 ... AWG 22

Technical characteristics

Cable diameter	2.9 ... 5.1 mm
Tightening torque	0.6 Nm
Material (insert)	Polyamide (PA)
Material (hood/housing)	Polyamide (PA), Zinc die-cast
Material (contacts)	Brass
Surface (contacts)	Gold plated
RoHS	compliant

Specifications and approvals

IEC 61076-2-101
UL 1977 ECBT2.E102079
CSA-C22.2 No. 182.3 ECBT8.E102079

Identification	Conductor cross-section (mm²)	Part number Male	Part number Female	Drawing (dimensions in mm)
Circular connectors M12, M12-S, Cable connector, Straight, *HARAX*® connection technology, Unshielded, 	0.14 ... 0.34	21 03 111 1405	21 03 111 2405	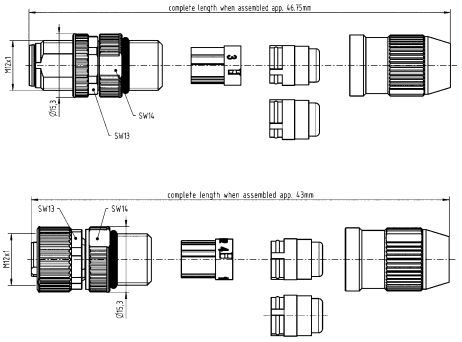

Number of contacts

4

HARAX® connection technology
Unshielded

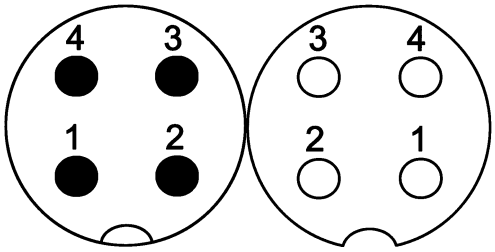

Technical characteristics

Number of contacts	4
Rated current	6 A
Rated voltage	50 V
Rated impulse voltage	1.5 kV
Pollution degree	3
Insulation resistance	>10^8 Ω
Contact resistance	≤10 mΩ
Mating cycles	≥100
Wire outer diameter	≤2.6 mm
Locking type	Screw locking
Degree of protection acc. to IEC 60529	IP65 / IP67, when mated
Conductor cross-section	0.34 ... 0.75 mm²
Conductor cross-section	AWG 22 ... AWG 18

Technical characteristics

Cable diameter	6 ... 8 mm, 7 ... 8.8 mm
Tightening torque	0.6 Nm
Material (insert)	Polyamide (PA)
Material (hood/housing)	Polyamide (PA), Zinc die-cast
Material (contacts)	Brass
Surface (contacts)	Gold plated
RoHS	compliant with exemption

Specifications and approvals

IEC 61076-2-101
UL 1977 ECBT2.E102079
CSA-C22.2 No. 182.3 ECBT8.E102079

Identification	Conductor cross-section (mm²)	Part number Male	Part number Female	Drawing (dimensions in mm)
Circular connectors M12, M12-L, Cable connector, Straight, *HARAX*® connection technology, Unshielded 	0.34 ... 0.75	21 03 212 1305	21 03 212 2305	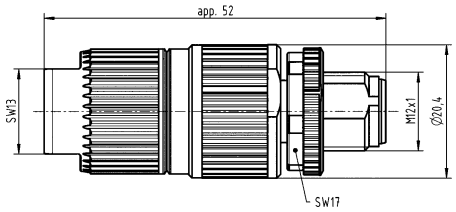 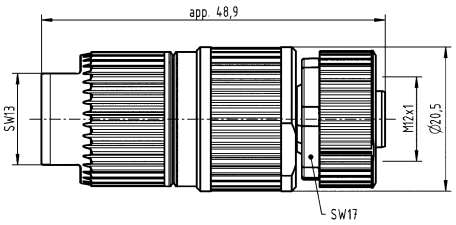
Circular connectors M12, M12-L, Cable connector, Straight, *HARAX*® connection technology, Unshielded, Cable-Ø 7 ... 8.8 mm 	0.34 ... 0.75	21 03 212 1407	21 03 212 2407	

Number of contacts

4

HARAX® connection technology
Unshielded

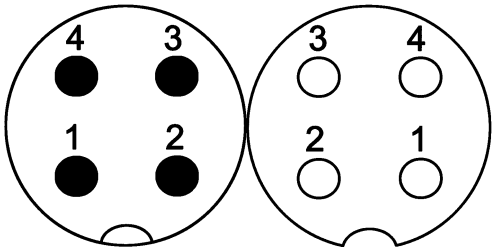

Technical characteristics

Number of contacts	4
Rated current	4 A
Rated voltage	32 V
Rated impulse voltage	1.5 kV
Pollution degree	3
Insulation resistance	>10^8 Ω
Contact resistance	≤10 mΩ
Mating cycles	≥100
Wire outer diameter	≤1.6 mm
Locking type	Screw locking
Degree of protection acc. to IEC 60529	IP65 / IP67, when mated
Conductor cross-section	0.25 ... 0.5 mm²
Conductor cross-section	AWG 24 ... AWG 20

Technical characteristics

Cable diameter	4 ... 5.1 mm
Tightening torque	0.6 Nm
Material (insert)	Polyamide (PA)
Material (hood/housing)	Polyamide (PA), Zinc die-cast
Material (contacts)	Brass
Surface (contacts)	Gold plated
RoHS	compliant

Specifications and approvals

IEC 61076-2-101
UL 1977 ECBT2.E102079
CSA-C22.2 No. 182.3 ECBT8.E102079

Identification	Conductor cross-section (mm²)	Part number Male	Part number Female	Drawing (dimensions in mm)
Circular connectors M12, Cable connector, Angled, *HARAX*® connection technology, Unshielded, 	0.25 ... 0.5	21 01 140 5081	21 01 140 5091	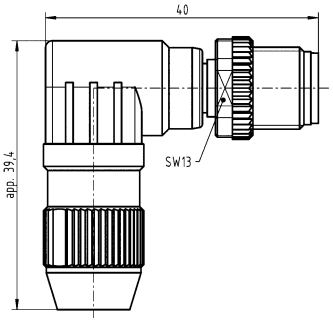 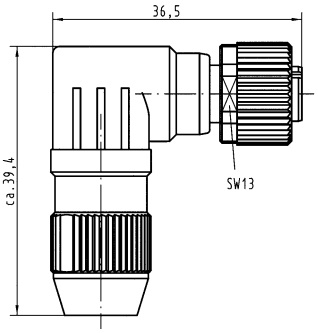

Number of contacts

4

HARAX® connection technology
Shielded

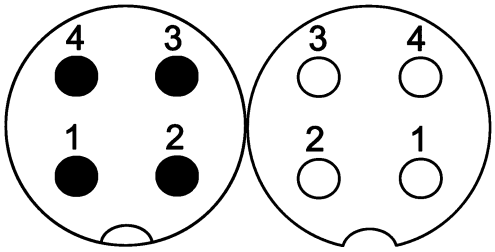

Technical characteristics

Number of contacts	4
Rated current	4 A
Rated voltage	50 V
Rated impulse voltage	1.5 kV
Pollution degree	3
Insulation resistance	>10^8 Ω
Contact resistance	≤10 mΩ
Mating cycles	≥100
Wire outer diameter	≤1.6 mm
Locking type	Screw locking
Degree of protection acc. to IEC 60529	IP65 / IP67, when mated
Conductor cross-section	0.14 ... 0.34 mm²
Conductor cross-section	AWG 26 ... AWG 22

Technical characteristics

Cable diameter	4.5 ... 8.8 mm
Tightening torque	0.6 Nm, 2 Nm Lock nut
Material (insert)	Polyamide (PA)
Material (hood/housing)	Zinc die-cast
Material (contacts)	Brass
Surface (contacts)	Gold plated
RoHS	compliant with exemption

Specifications and approvals

IEC 61076-2-101
UL 1977 ECBT2.E102079
CSA-C22.2 No. 182.3 ECBT8.E102079

Identification	Conductor cross-section (mm²)	Part number Male	Part number Female	Drawing (dimensions in mm)
Circular connectors M12, M12-L, Cable connector, Straight, *HARAX*® connection technology, Shielded 	0.14 ... 0.34	21 03 221 1405	21 03 221 2405	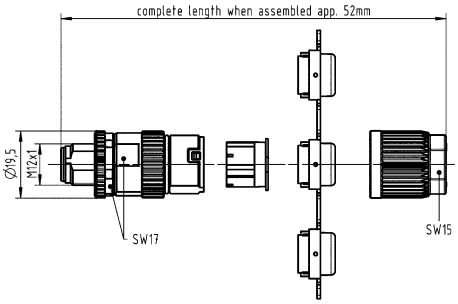 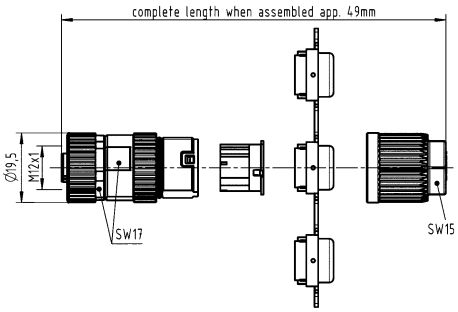

M12

Identification	Conductor cross-section (mm²)	Part number Male	Part number Female	Drawing (dimensions in mm)
Circular connectors M12, M12-L, Cable connector, Panel feed through, for rear mounting, *HARAX*® connection technology, Shielded 	0.14 ... 0.34	21 03 321 1425	21 03 321 2425	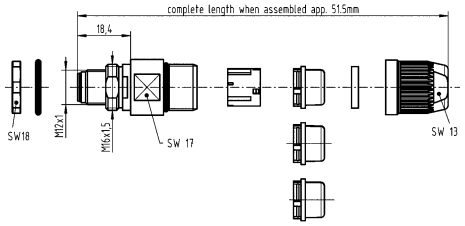 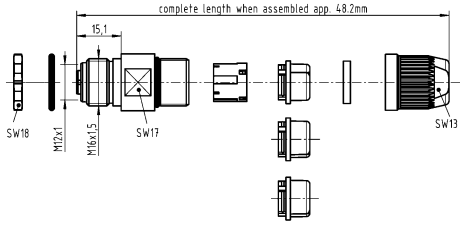

Number of contacts

4

Screw termination
Unshielded

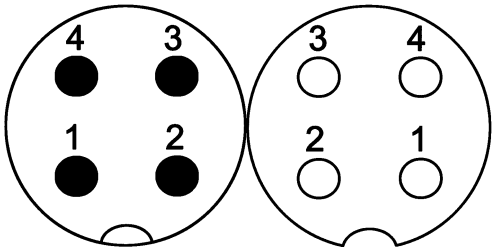

Technical characteristics

Number of contacts	4
Rated current	7.5 A
Rated voltage	250 V
Rated impulse voltage	1.5 kV
Pollution degree	3
Insulation resistance	>10^8 Ω
Contact resistance	≤10 mΩ
Mating cycles	≥100
Locking type	Screw locking
Degree of protection acc. to IEC 60529	IP67, when mated
Conductor cross-section	1.5 mm² max.
Conductor cross-section	AWG 16

Technical characteristics

Cable diameter	4 ... 8 mm
Tightening torque	0.6 Nm
Material (insert)	Polyamide (PA)
Material (hood/housing)	Polyamide (PA), Zinc die-cast
Material (contacts)	Brass
Surface (contacts)	Gold plated
RoHS	compliant with exemption

Specifications and approvals

IEC 61076-2-101

Identification	Conductor cross-section (mm²)	Part number Male	Part number Female	Drawing (dimensions in mm)
Circular connectors M12, Cable connector, Straight, Screw termination, Unshielded 	1.5 max.	21 03 319 1401	21 03 319 2401	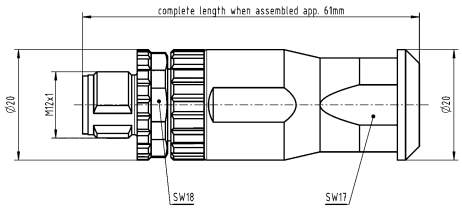 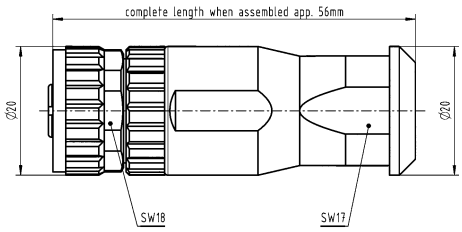

M12

Identification	Conductor cross-section (mm²)	Part number Male	Part number Female	Drawing (dimensions in mm)
Circular connectors M12, Cable connector, Angled, Screw termination, Unshielded 	1.5 max.	21 03 319 3401	21 03 319 4401	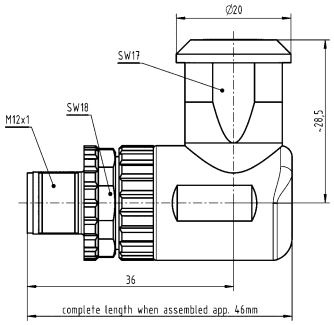 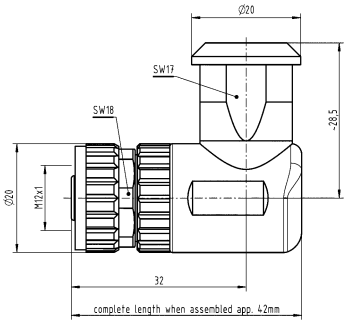

Number of contacts

4

Screw termination
Shielded

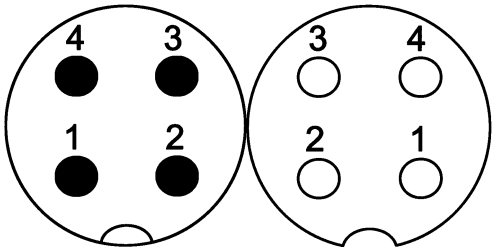

Technical characteristics

Number of contacts	4
Rated current	4 A
Rated voltage	250 V
Rated impulse voltage	1.5 kV
Pollution degree	3
Insulation resistance	>10^8 Ω
Contact resistance	≤10 mΩ
Mating cycles	≥100
Locking type	Screw locking
Degree of protection acc. to IEC 60529	IP67, when mated
Conductor cross-section	1.5 mm² max.
Conductor cross-section	AWG 16

Technical characteristics

Cable diameter	4 ... 8 mm
Tightening torque	0.6 Nm
Material (insert)	Polyamide (PA)
Material (hood/housing)	Zinc die-cast
Material (contacts)	Brass
Surface (contacts)	Gold plated
RoHS	compliant with exemption

Specifications and approvals

IEC 61076-2-101

Identification	Conductor cross-section (mm²)	Part number Male	Part number Female	Drawing (dimensions in mm)
Circular connectors M12, Cable connector, Straight, Screw termination, Shielded 	1.5 max.	21 03 329 1401	21 03 329 2401	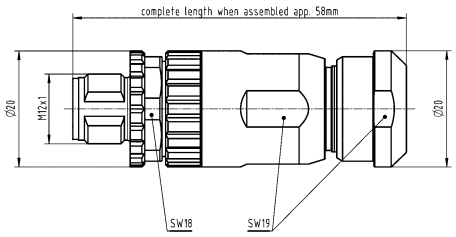 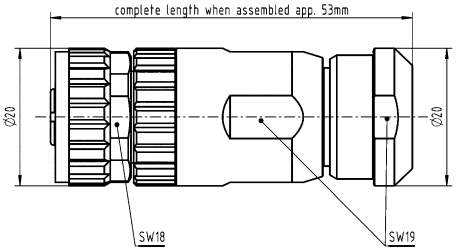

Number of contacts

5

HARAX® connection technology
Unshielded

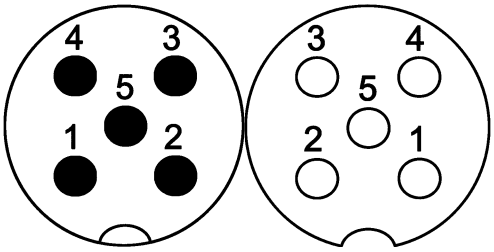

Technical characteristics

Number of contacts	5
Rated current	4 A
Rated voltage	50 V
Rated impulse voltage	1.5 kV
Pollution degree	3
Insulation resistance	>10^8 Ω
Contact resistance	≤10 mΩ
Mating cycles	≥100
Wire outer diameter	≤2 mm
Locking type	Screw locking
Degree of protection acc. to IEC 60529	IP65 / IP67, when mated
Conductor cross-section	0.34 ... 0.5 mm²
Conductor cross-section	AWG 22 ... AWG 20

Technical characteristics

Cable diameter	6 ... 8 mm
Tightening torque	0.6 Nm
Material (insert)	Polyamide (PA)
Material (hood/housing)	Polyamide (PA), Zinc die-cast
Material (contacts)	Brass
Surface (contacts)	Gold plated
RoHS	compliant with exemption

Specifications and approvals

IEC 61076-2-101
UL 1977 ECBT2.E102079
CSA-C22.2 No. 182.3 ECBT8.E102079

Identification	Conductor cross-section (mm²)	Part number Male	Part number Female	Drawing (dimensions in mm)
Circular connectors M12, M12-L, Cable connector, Straight, *HARAX*® connection technology, Unshielded 	0.34 ... 0.5	21 03 272 1505	21 03 272 2505	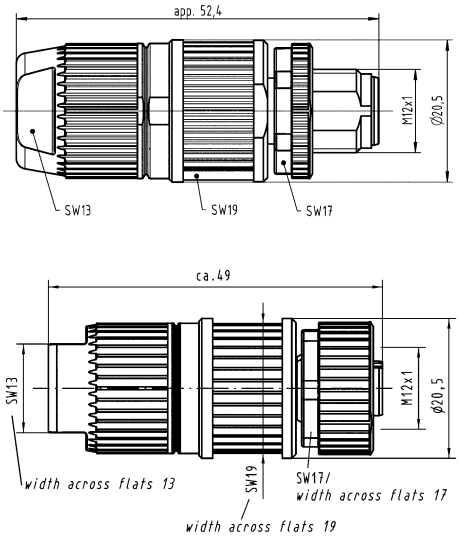

Number of contacts

5

Crimp termination
Shielded

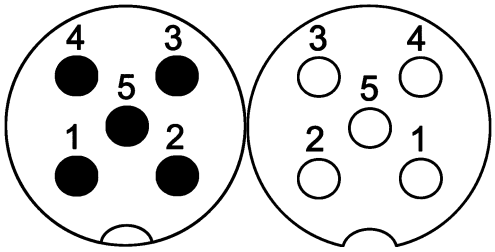

Technical characteristics

Number of contacts	5
Rated current	4 A
Rated impulse voltage	1.5 kV
Pollution degree	3
Rated voltage	48 V AC, 60 V DC
Insulation resistance	>10^8 Ω
Contact resistance	≤10 mΩ
Mating cycles	≥500
Wire outer diameter	≤2.3 mm
Locking type	Screw locking
Degree of protection acc. to IEC 60529	IP65 / IP67, when mated
Conductor cross-section	0.14 ... 0.75 mm², 0.09 ... 0.25 mm², 0.13 ... 0.33 mm², 0.25 ... 0.52 mm², 0.33 ... 0.82 mm²

Technical characteristics

Conductor cross-section	AWG 26 ... AWG 18, AWG 28 ... AWG 24, AWG 26 ... AWG 22, AWG 24 ... AWG 20, AWG 22 ... AWG 18
Cable diameter	4.5 ... 8.8 mm
Tightening torque	0.6 Nm
Material (insert)	Polyamide (PA)
Material (hood/housing)	Zinc die-cast
Material (contacts)	Copper alloy
RoHS	compliant, compliant with exemption

Specifications and approvals

IEC 61076-2-101
UL 1977 ECBT2.E102079
CSA-C22.2 No. 182.3 ECBT8.E102079

Identification	Conductor cross-section (mm²)	Part number Male	Part number Female	Drawing (dimensions in mm)
Circular connectors M12, Cable connector, with conduit, Straight, Crimp termination, Shielded  Please order crimp contacts separately.	0.14 ... 0.75	21 03 812 1511	21 03 812 2511	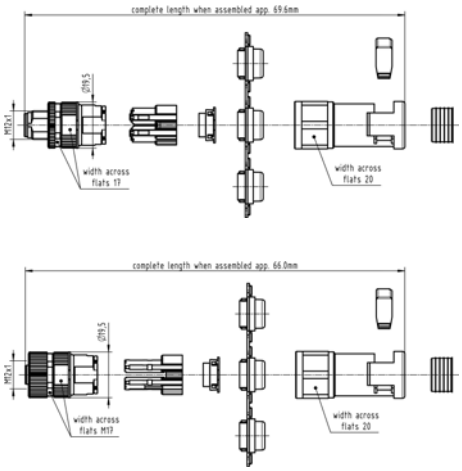
D-Sub, Standard, Crimp contact, Turned contacts 	0.09 ... 0.25 0.13 ... 0.33 0.25 ... 0.52 0.33 ... 0.82	09 67 000 7576 09 67 000 5576 09 67 000 8576 09 67 000 3576	09 67 000 7476 09 67 000 5476 09 67 000 8476 09 67 000 3476	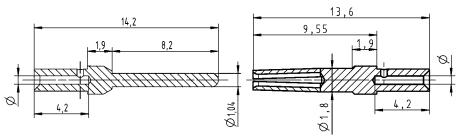

Wire gauge	ø	Stripping length
0.09-0.25 mm²	0.64 mm	4 mm
0.13-0.33 mm²	0.88 mm	4 mm
0.25-0.52 mm²	1.13 mm	4 mm
0.33-0.82 mm²	1.34 mm	4 mm
for stranded wire according IEC 60228 Class 5		

Number of contacts

5

Screw termination
Unshielded

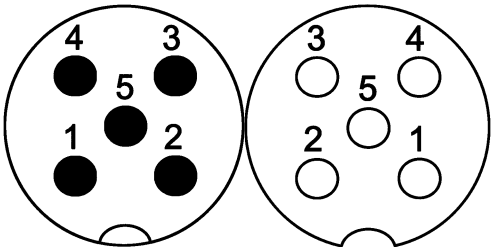

Technical characteristics

Number of contacts	5
Rated current	7.5 A
Rated voltage	60 V
Rated impulse voltage	1.5 kV
Pollution degree	3
Insulation resistance	>10^8 Ω
Contact resistance	≤10 mΩ
Mating cycles	≥100
Locking type	Screw locking
Degree of protection acc. to IEC 60529	IP67, when mated
Conductor cross-section	1.5 mm² max.
Conductor cross-section	AWG 16

Technical characteristics

Cable diameter	4 ... 8 mm
Tightening torque	0.6 Nm
Material (insert)	Polyamide (PA)
Material (hood/housing)	Polyamide (PA), Zinc die-cast
Material (contacts)	Brass
Surface (contacts)	Gold plated
RoHS	compliant, compliant with exemption

Specifications and approvals

IEC 61076-2-101

Identification	Conductor cross-section (mm²)	Part number Male	Part number Female	Drawing (dimensions in mm)
Circular connectors M12, Cable connector, Straight, Screw termination, Unshielded 	1.5 max.	21 03 319 1501	21 03 319 2501	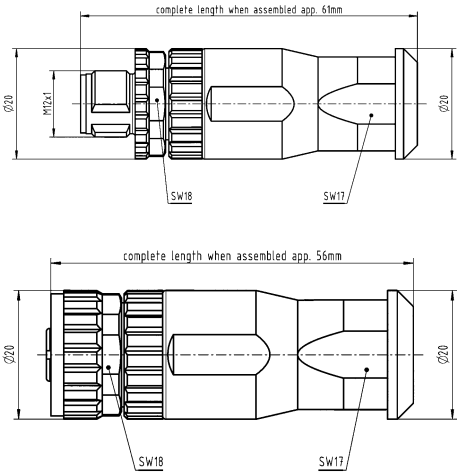

Identification	Conductor cross-section (mm²)	Part number Male	Part number Female	Drawing (dimensions in mm)
Circular connectors M12, Cable connector, Angled, Screw termination, Unshielded 	1.5 max.	21 03 319 3501	21 03 319 4501	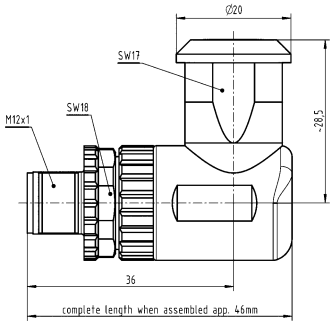 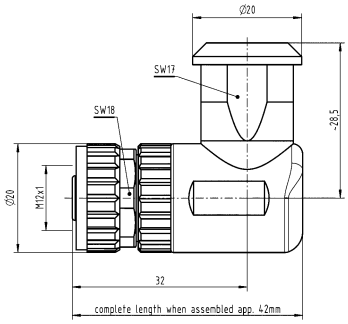

Number of contacts

5

Screw termination
Shielded

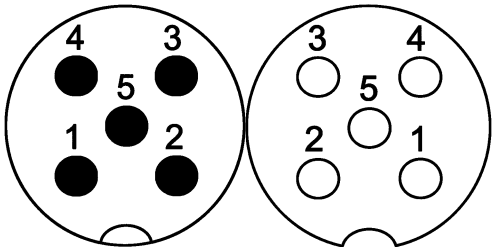

Technical characteristics

Number of contacts	5
Rated current	4 A
Rated voltage	60 V
Rated impulse voltage	1.5 kV
Pollution degree	3
Insulation resistance	>10^8 Ω
Contact resistance	≤10 mΩ
Mating cycles	≥100
Locking type	Screw locking
Degree of protection acc. to IEC 60529	IP67, when mated
Conductor cross-section	1.5 mm² max.
Conductor cross-section	AWG 16

Technical characteristics

Cable diameter	4 ... 8 mm
Tightening torque	0.6 Nm
Material (insert)	Polyamide (PA)
Material (hood/housing)	Zinc die-cast
Material (contacts)	Brass
Surface (contacts)	Gold plated
RoHS	compliant with exemption

Specifications and approvals

IEC 61076-2-101

Identification	Conductor cross-section (mm²)	Part number Male	Part number Female	Drawing (dimensions in mm)
Circular connectors M12, Cable connector, Straight, Screw termination, Shielded 	1.5 max.	21 03 329 1501	21 03 329 2501	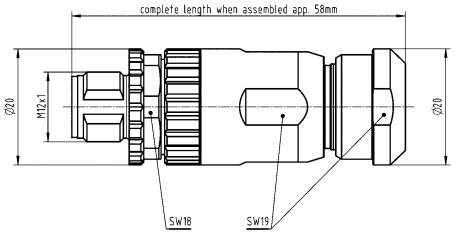 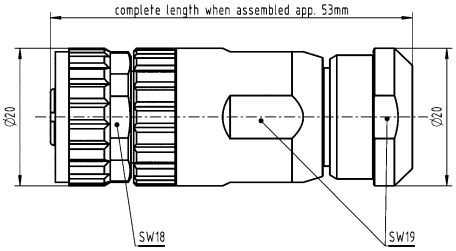

Number of contacts

8

IDC termination
Shielded

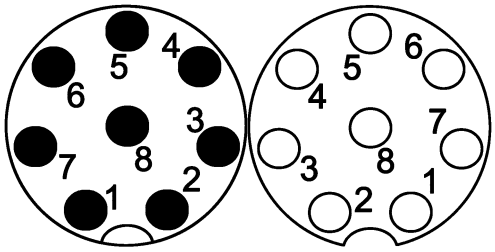

Technical characteristics

Number of contacts	8
Rated current	2 A
Rated voltage	30 V
Rated impulse voltage	0.8 kV
Pollution degree	3
Insulation resistance	>10^8 Ω
Contact resistance	≤10 mΩ
Mating cycles	≥100
Wire outer diameter	≤1.6 mm
Locking type	Screw locking
Degree of protection acc. to IEC 60529	IP65 / IP67, when mated
Conductor cross-section	0.14 ... 0.34 mm²
Conductor cross-section	AWG 26 ... AWG 22

Technical characteristics

Cable diameter	4 ... 8 mm
Tightening torque	0.4 Nm
Material (insert)	Polyamide (PA)
Material (hood/housing)	Zinc die-cast
Material (contacts)	Brass
Surface (contacts)	Gold plated
RoHS	compliant, compliant with exemption

Specifications and approvals

IEC 61076-2-101

Identification	Conductor cross-section (mm²)	Part number Male	Part number Female	Drawing (dimensions in mm)
Circular connectors M12, M12-L, Cable connector, Straight, IDC termination, Shielded 	0.14 ... 0.34	21 03 121 1801	21 03 121 2801	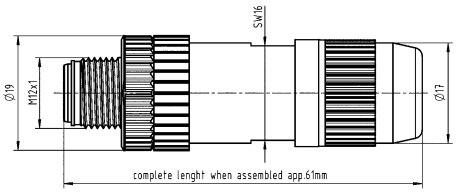 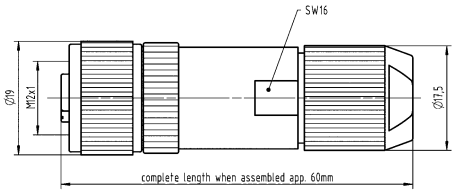

Number of contacts

8

Screw termination
Unshielded

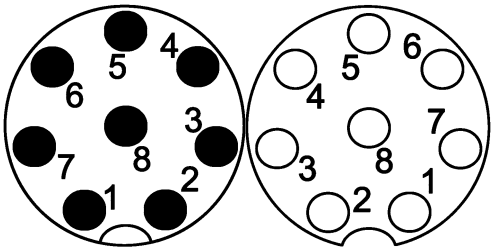

Technical characteristics

Number of contacts	8
Rated current	2 A
Rated voltage	30 V
Rated impulse voltage	0.8 kV
Pollution degree	3
Insulation resistance	>10^8 Ω
Contact resistance	≤10 mΩ
Mating cycles	≥100
Locking type	Screw locking
Degree of protection acc. to IEC 60529	IP67, when mated
Conductor cross-section	0.5 mm² max.
Conductor cross-section	AWG 20

Technical characteristics

Cable diameter	4 ... 8 mm
Tightening torque	0.6 Nm
Material (insert)	Polyamide (PA)
Material (hood/housing)	Polyamide (PA), Zinc die-cast
Material (contacts)	Brass
Surface (contacts)	Gold plated
RoHS	compliant with exemption

Specifications and approvals

IEC 61076-2-101

Identification	Conductor cross-section (mm²)	Part number Male	Part number Female	Drawing (dimensions in mm)
Circular connectors M12, Cable connector, Straight, Screw termination, Unshielded 	0.5 max.	21 03 319 1801	21 03 319 2801	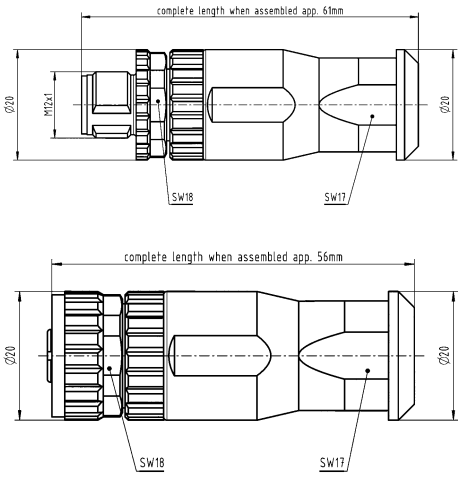

Identification	Conductor cross-section (mm²)	Part number Male	Part number Female	Drawing (dimensions in mm)
Circular connectors M12, Cable connector, Angled, Screw termination, Unshielded 	0.5 max.	21 03 319 3801	21 03 319 4801	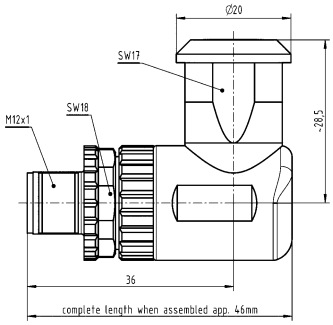 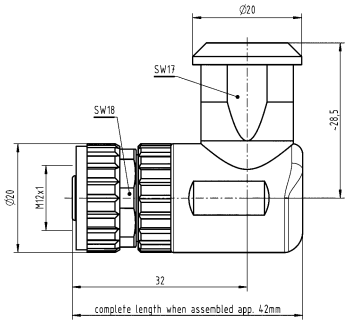

Number of contacts

8

Screw termination
Shielded

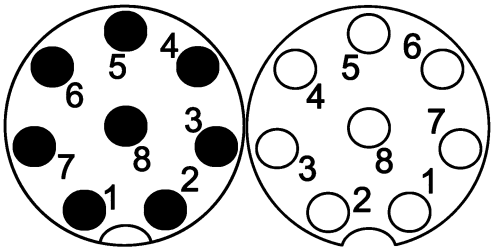

Technical characteristics

Number of contacts	8
Rated current	2 A
Rated voltage	30 V
Rated impulse voltage	0.8 kV
Pollution degree	3
Insulation resistance	>10^8 Ω
Contact resistance	≤10 mΩ
Mating cycles	≥100
Locking type	Screw locking
Degree of protection acc. to IEC 60529	IP67, when mated
Conductor cross-section	0.5 mm² max.
Conductor cross-section	AWG 20

Technical characteristics

Cable diameter	4 ... 8 mm
Tightening torque	0.6 Nm
Material (insert)	Polyamide (PA)
Material (hood/housing)	Zinc die-cast
Material (contacts)	Brass
Surface (contacts)	Gold plated
RoHS	compliant with exemption

Specifications and approvals

IEC 61076-2-101

Identification	Conductor cross-section (mm²)	Part number Male	Part number Female	Drawing (dimensions in mm)
Circular connectors M12, Cable connector, Straight, Screw termination, Shielded 	0.5 max.	21 03 329 1801	21 03 329 2801	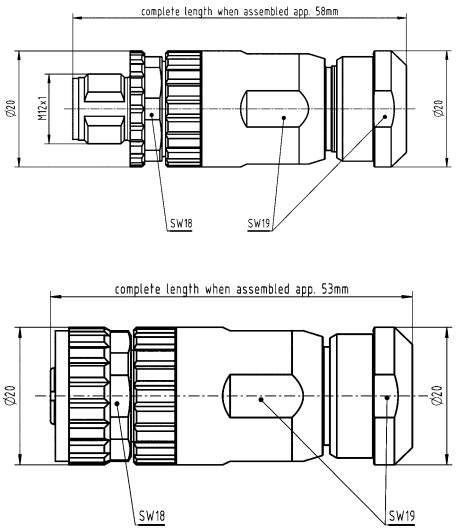

Number of contacts

2

HARAX® connection technology
Shielded

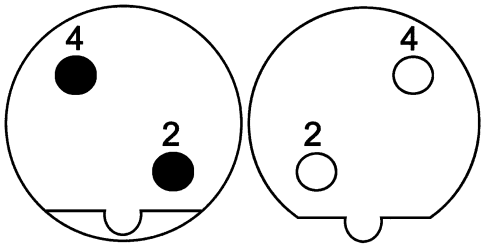

Technical characteristics

Number of contacts	2
Rated current	4 A
Rated voltage	32 V
Rated impulse voltage	1.5 kV
Pollution degree	3
Insulation resistance	>10^8 Ω
Contact resistance	≤10 mΩ
Mating cycles	≥100
Wire outer diameter	≤2.6 mm
Locking type	Screw locking
Degree of protection acc. to IEC 60529	IP65 / IP67, when mated
Conductor cross-section	0.25 ... 0.34 mm²
Conductor cross-section	AWG 24 ... AWG 22

Technical characteristics

Cable diameter	4.5 ... 8.8 mm, 7 ... 8.8 mm
Tightening torque	0.6 Nm, 2 Nm Lock nut
Material (insert)	Polyamide (PA)
Material (hood/housing)	Zinc die-cast
Material (contacts)	Brass
Surface (contacts)	Gold plated
RoHS	compliant with exemption

Specifications and approvals

IEC 61076-2-101
UL 1977 ECBT2.E102079
CSA-C22.2 No. 182.3 ECBT8.E102079

Identification	Conductor cross-section (mm²)	Part number Male	Part number Female	Drawing (dimensions in mm)
Circular connectors M12, M12-L, Cable connector, Straight, *HARAX*® connection technology, Shielded 	0.25 ... 0.34	21 03 241 1301	21 03 241 2301	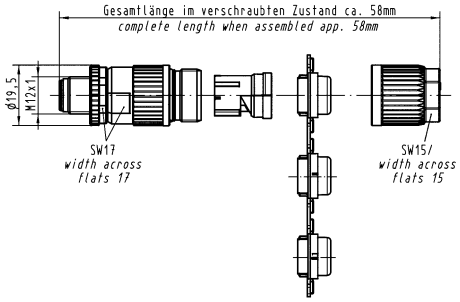 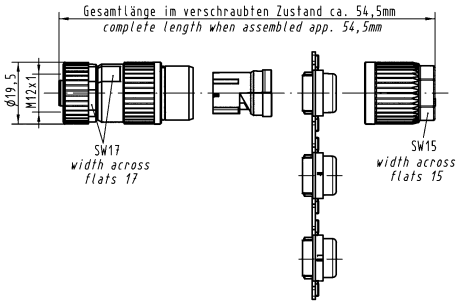

Identification	Conductor cross-section (mm²)	Part number Male	Part number Female	Drawing (dimensions in mm)
Circular connectors M12, M12-L, Cable connector, Panel feed through, for rear mounting, *HARAX*® connection technology, Shielded, Cable-Ø 7 ... 8.8 mm 	0.25 ... 0.34	21 03 341 1425	21 03 341 2425	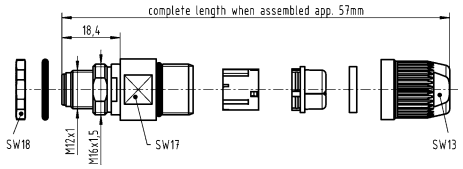 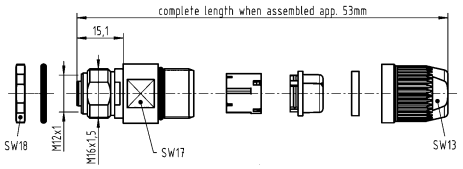

Number of contacts

5

Crimp termination
Shielded

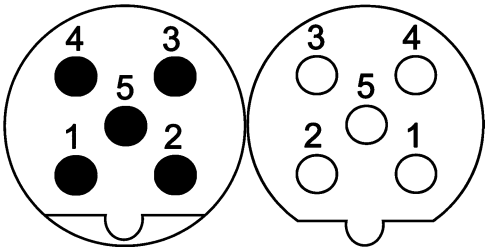

Technical characteristics

Number of contacts	5
Rated current	4 A
Rated voltage	60 V
Rated impulse voltage	1.5 kV
Pollution degree	3
Insulation resistance	>10^8 Ω
Contact resistance	≤10 mΩ
Mating cycles	≥500
Wire outer diameter	≤2.3 mm
Locking type	Screw locking
Degree of protection acc. to IEC 60529	IP65 / IP67, when mated
Conductor cross-section	0.14 ... 0.75 mm², 0.09 ... 0.25 mm², 0.13 ... 0.33 mm², 0.25 ... 0.52 mm², 0.33 ... 0.82 mm²

Technical characteristics

Conductor cross-section	AWG 26 ... AWG 18, AWG 28 ... AWG 24, AWG 26 ... AWG 22, AWG 24 ... AWG 20, AWG 22 ... AWG 18
Cable diameter	4.5 ... 8.8 mm
Tightening torque	0.6 Nm, 2 Nm Lock nut
Material (insert)	Polyamide (PA)
Material (hood/housing)	Zinc die-cast
Material (contacts)	Copper alloy
RoHS	compliant, compliant with exemption

Specifications and approvals

IEC 61076-2-101
UL 1977 ECBT2.E102079
CSA-C22.2 No. 182.3 ECBT8.E102079

Identification	Conductor cross-section (mm²)	Part number Male	Part number Female	Drawing (dimensions in mm)
Circular connectors M12, Cable connector, Straight, Crimp termination, Shielded  Please order crimp contacts separately.	0.14 ... 0.75	21 03 841 1505	21 03 841 2505	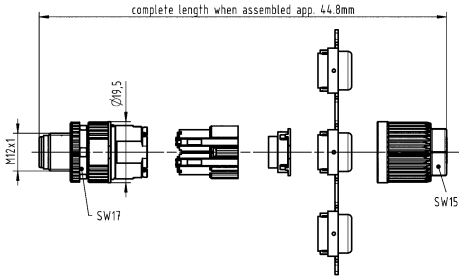 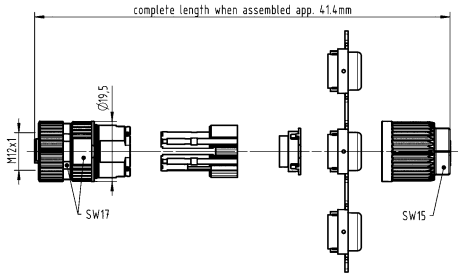

Identification	Conductor cross-section (mm²)	Part number Male	Part number Female	Drawing (dimensions in mm)
Circular connectors M12, Cable connector, Panel feed through, for rear mounting, Crimp termination, Shielded  Please order crimp contacts separately.	0.14 ... 0.75	21 03 841 1525	21 03 841 2525	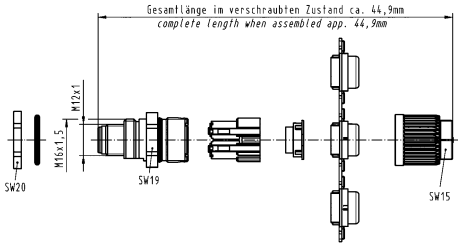 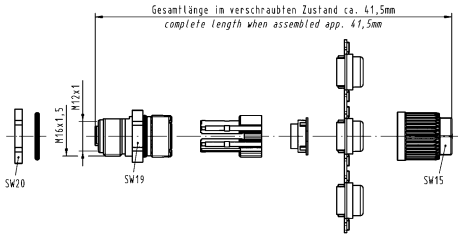
D-Sub, Standard, Crimp contact, Turned contacts 	0.09 ... 0.25 0.13 ... 0.33 0.25 ... 0.52 0.33 ... 0.82	09 67 000 7576 09 67 000 5576 09 67 000 8576 09 67 000 3576	09 67 000 7476 09 67 000 5476 09 67 000 8476 09 67 000 3476	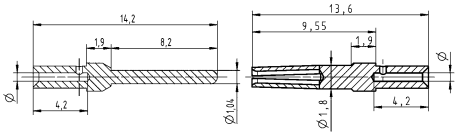 Wire gauge / ø / Stripping length 0.09-0.25 mm² / 0.64 mm / 4 mm 0.13-0.33 mm² / 0.88 mm / 4 mm 0.25-0.52 mm² / 1.13 mm / 4 mm 0.33-0.82 mm² / 1.34 mm / 4 mm for stranded wire according IEC 60228 Class 5

Number of contacts

5

Screw termination
Shielded

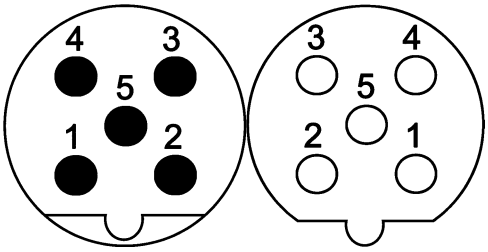

Technical characteristics

Number of contacts	5
Rated current	4 A
Rated voltage	60 V
Rated impulse voltage	1.5 kV
Pollution degree	3
Insulation resistance	>10^8 Ω
Contact resistance	≤10 mΩ
Mating cycles	≥100
Locking type	Screw locking
Degree of protection acc. to IEC 60529	IP67, when mated
Conductor cross-section	1.5 mm² max.
Conductor cross-section	AWG 16

Technical characteristics

Cable diameter	4 ... 8 mm
Tightening torque	0.6 Nm
Material (insert)	Polyamide (PA)
Material (hood/housing)	Zinc die-cast
Material (contacts)	Brass
Surface (contacts)	Gold plated
RoHS	compliant with exemption

Specifications and approvals

IEC 61076-2-101

Identification	Conductor cross-section (mm²)	Part number Male	Part number Female	Drawing (dimensions in mm)
Circular connectors M12, Cable connector, Straight, Screw termination, Shielded 	1.5 max.	21 03 349 1501	21 03 349 2501	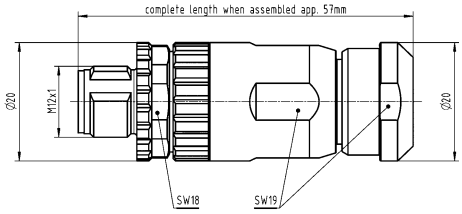 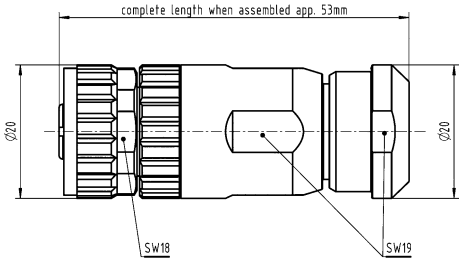

Number of contacts

4

HARAX® connection technology
Shielded

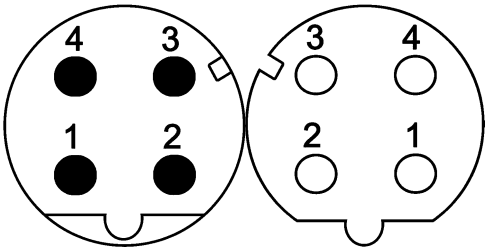

Technical characteristics

Number of contacts	4
Rated current	4 A
Rated voltage	50 V
Rated impulse voltage	1.5 kV
Pollution degree	3
Insulation resistance	>10^8 Ω
Contact resistance	≤10 mΩ
Mating cycles	≥100
Wire outer diameter	≤2 mm
Locking type	Screw locking
Degree of protection acc. to IEC 60529	IP65 / IP67, when mated
Conductor cross-section	0.14 ... 0.34 mm², 0.34 ... 0.75 mm²
Conductor cross-section	AWG 26 ... AWG 22, AWG 22 ... AWG 18
Cable diameter	4.5 ... 8.8 mm
Transmission characteristics	Cat. 5, Class D up to 100 MHz
Tightening torque	0.6 Nm, 2 Nm Lock nut
Material (insert)	Polyamide (PA)

Technical characteristics

Material (hood/housing)	Zinc die-cast
Material (contacts)	Brass
Surface (contacts)	Gold plated
RoHS	compliant with exemption

Specifications and approvals

IEC 61076-2-101
UL 1977 ECBT2.E102079
CSA-C22.2 No. 182.3 ECBT8.E102079

Details

For Fast Ethernet applications only

Identification	Conductor cross-section (mm²)	Part number Male	Part number Female	Drawing (dimensions in mm)
Circular connectors M12, M12-L, Cable connector, Straight, *HARAX*® connection technology, Shielded 	0.14 ... 0.34 0.34 ... 0.75	21 03 281 1405 21 03 282 1405	21 03 281 2405 21 03 282 2405	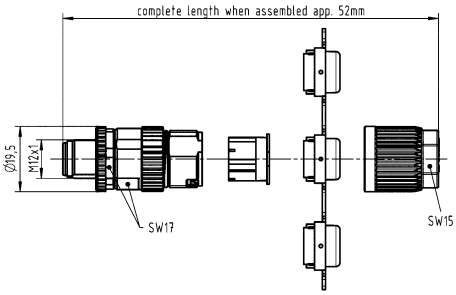 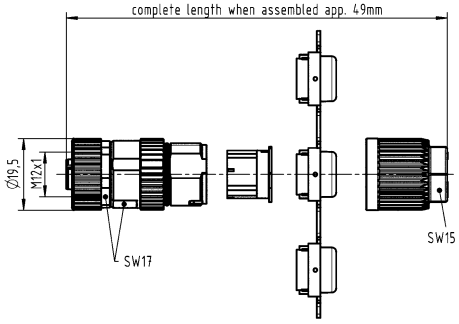

Identification	Conductor cross-section (mm²)	Part number Male	Part number Female	Drawing (dimensions in mm)
Circular connectors M12, M12-L, Cable connector, Panel feed through, for rear mounting, *HARAX*® connection technology, Shielded 	0.14 ... 0.34	21 03 381 1425	21 03 381 2425	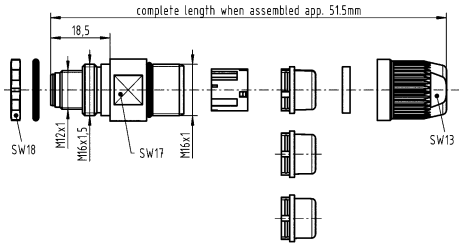 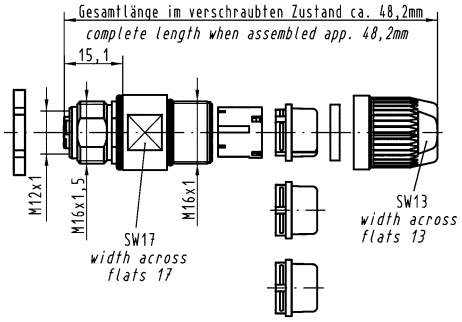

Number of contacts

4

Crimp termination
Shielded

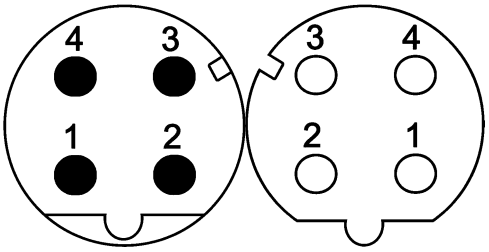

Technical characteristics

Number of contacts	4
Rated current	4 A
Rated impulse voltage	1.5 kV
Pollution degree	3
Rated voltage	48 V AC, 60 V DC
Insulation resistance	>10^8 Ω
Contact resistance	≤10 mΩ
Mating cycles	≥500
Wire outer diameter	≤2.3 mm
Locking type	Screw locking
Degree of protection acc. to IEC 60529	IP65 / IP67, when mated
Conductor cross-section	0.14 ... 0.75 mm², 0.09 ... 0.25 mm², 0.13 ... 0.33 mm², 0.25 ... 0.52 mm², 0.33 ... 0.82 mm²
Conductor cross-section	AWG 26 ... AWG 18, AWG 28 ... AWG 24, AWG 26 ... AWG 22, AWG 24 ... AWG 20, AWG 22 ... AWG 18

Technical characteristics

Cable diameter	4.5 ... 8.8 mm
Transmission characteristics	Cat. 5, Class D up to 100 MHz
Tightening torque	0.6 Nm
Material (insert)	Polyamide (PA)
Material (hood/housing)	Zinc die-cast
Material (contacts)	Copper alloy
RoHS	compliant with exemption

Specifications and approvals

IEC 61076-2-101
UL 1977 ECBT2.E102079
CSA-C22.2 No. 182.3 ECBT8.E102079

Details

For Fast Ethernet applications only

Identification	Conductor cross-section (mm²)	Part number Male	Part number Female	Drawing (dimensions in mm)
Circular connectors M12, Cable connector, with conduit, Straight, Crimp termination, Shielded  Please order crimp contacts separately.	0.14 ... 0.75	21 03 882 1411	21 03 882 2411	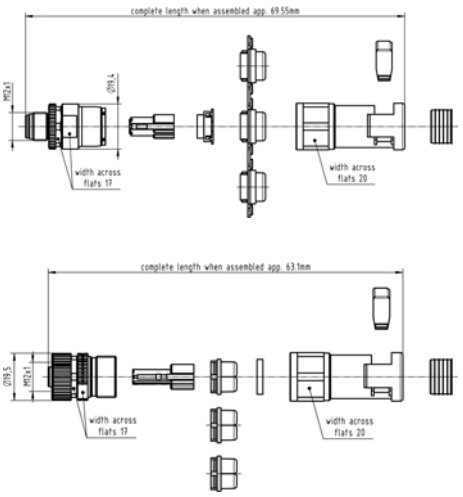

Identification	Conductor cross-section (mm²)	Part number Male	Part number Female	Drawing (dimensions in mm)
D-Sub, Standard, Crimp contact, Turned contacts	0.09 ... 0.25 0.13 ... 0.33 0.25 ... 0.52 0.33 ... 0.82	09 67 000 7576 09 67 000 5576 09 67 000 8576 09 67 000 3576	09 67 000 7476 09 67 000 5476 09 67 000 8476 09 67 000 3476	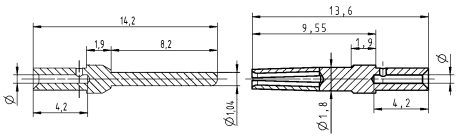

Wire gauge	ø	Stripping length
0.09-0.25 mm²	0.64 mm	4 mm
0.13-0.33 mm²	0.88 mm	4 mm
0.25-0.52 mm²	1.13 mm	4 mm
0.33-0.82 mm²	1.34 mm	4 mm
for stranded wire according IEC 60228 Class 5		

Number of contacts

4

Screw termination
Shielded

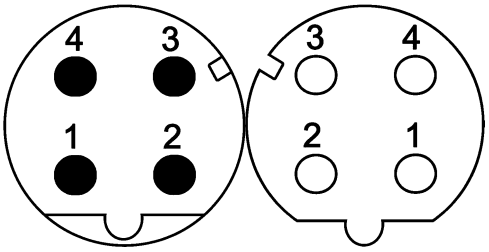

Technical characteristics

Number of contacts	4
Rated current	4 A
Rated voltage	250 V
Rated impulse voltage	1.5 kV
Pollution degree	3
Insulation resistance	>10^8 Ω
Contact resistance	≤10 mΩ
Mating cycles	≥100
Locking type	Screw locking
Degree of protection acc. to IEC 60529	IP67, when mated
Conductor cross-section	1.5 mm² max.
Conductor cross-section	AWG 16
Cable diameter	4 ... 8 mm
Transmission characteristics	Cat. 5, Class D up to 100 MHz
Tightening torque	0.6 Nm

Technical characteristics

Material (insert)	Polyamide (PA)
Material (hood/housing)	Zinc die-cast
Material (contacts)	Brass
Surface (contacts)	Gold plated
RoHS	compliant with exemption

Specifications and approvals

IEC 61076-2-101

Details

For Fast Ethernet applications only

Identification	Conductor cross-section (mm²)	Part number Male	Part number Female	Drawing (dimensions in mm)
Circular connectors M12, Cable connector, Straight, Screw termination, Shielded, IP67 	1.5 max.	21 03 389 1402	21 03 389 2402	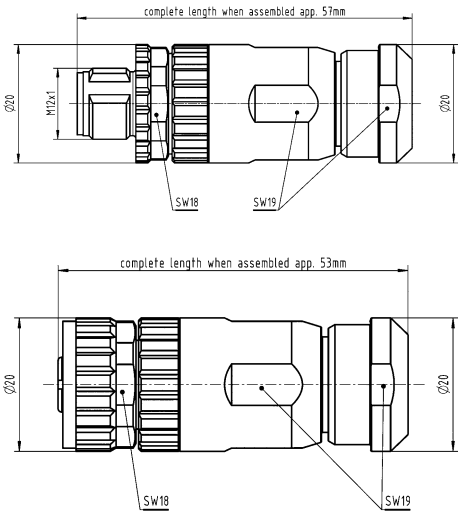

Number of contacts

4

Screw termination
Shielded

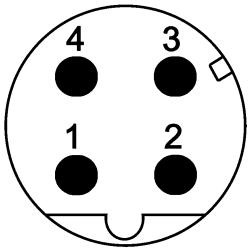

Technical characteristics

Number of contacts	4
Rated current	4 A
Rated voltage	250 V
Rated impulse voltage	1.5 kV
Pollution degree	3
Insulation resistance	>10^8 Ω
Contact resistance	≤10 mΩ
Mating cycles	≥100
Locking type	Screw locking
Degree of protection acc. to IEC 60529	IP65, when mated
Conductor cross-section	1.5 mm² max.
Conductor cross-section	AWG 16
Cable diameter	4.5 ... 8.3 mm
Transmission characteristics	Cat. 5, Class D up to 100 MHz
Tightening torque	0.6 Nm

Technical characteristics

Material (insert)	Polyamide (PA)
Material (hood/housing)	Zinc die-cast
Material (contacts)	Brass
Surface (contacts)	Gold plated

Specifications and approvals

IEC 61076-2-101
UL 1977 ECBT2.E102079
CSA-C22.2 No. 182.3 ECBT8.E102079

Details

For Fast Ethernet applications only

Identification	Conductor cross-section (mm²)	Part number Male	Drawing (dimensions in mm)
Circular connectors M12, Cable connector, Angled, Screw termination, Shielded, IP65 	1.5 max.	21 43 786 3401	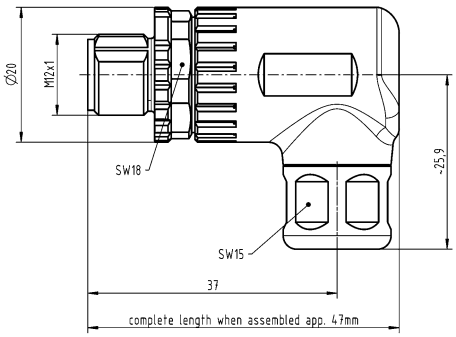

M12

Number of contacts

4

preLink® IDC insulation displacement termination
Shielded

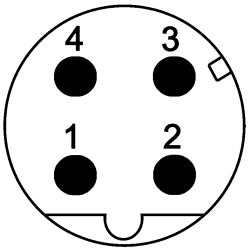

Technical characteristics

Number of contacts	4
Limiting temperature	-40 ... +85 °C
Mating cycles	≥500
Locking type	Screw locking
Degree of protection acc. to IEC 60529	IP65, IP67
Conductor cross-section	0.1 ... 0.12 mm², 0.22 ... 0.32 mm²
Conductor cross-section	AWG 27 ... AWG 26, AWG 24 ... AWG 22
Cable diameter	5 ... 9.5 mm
Transmission characteristics	Cat. 5, Class D up to 100 MHz
Data rate	10 Mbit/s, 100 Mbit/s
Material (hood/housing)	Zinc die-cast
Surface (hood/housing)	Nickel plated
RoHS	compliant with exemption

Specifications and approvals

UL 1863 DUXR2.E470046
CSA-C22.2 No. 182.4, No. 233-09 DUXR8.E470046
DNV GL

Details

For Fast Ethernet applications only

Identification	Conductor cross-section (mm²)	Part number Male	Drawing (dimensions in mm)
preLink®, Circular connectors M12, Screw mounted housing, Cable connector, preLink® IDC insulation displacement termination, Shielded  Please order terminal module separately	0.1 ... 0.12, 0.22 ... 0.32	20 82 005 0001	

Number of contacts

4

preLink® IDC insulation displacement termination
Shielded

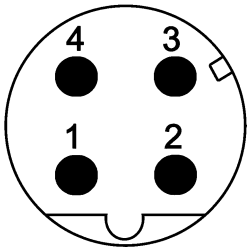

Technical characteristics

Number of contacts	4
Limiting temperature	-40 ... +85 °C
Mating cycles	≥500
Locking type	Screw locking
Degree of protection acc. to IEC 60529	IP65, IP67
Conductor cross-section	0.1 ... 0.12 mm², 0.22 ... 0.32 mm²
Conductor cross-section	AWG 27 ... AWG 26, AWG 24 ... AWG 22
Cable diameter	5 ... 9.5 mm
Transmission characteristics	Cat. 5, Class D up to 100 MHz
Data rate	10 Mbit/s, 100 Mbit/s
Material (insert)	Zinc die-cast, nickel-plated
Material (hood/housing)	Zinc die-cast
RoHS	compliant with exemption, compliant

Specifications and approvals

UL 1863 DUXR2.E470046
CSA-C22.2 No. 182.4, No. 233-09 DUXR8.E470046
DNV GL

Details

For Fast Ethernet applications only

Identification	Conductor cross-section (mm²)	Part number Male	Drawing (dimensions in mm)
preLink®, Circular connectors M12, Connector insert, preLink® IDC insulation displacement termination, Shielded  Please order terminal module separately Please order screw mounted housing separately.	0.1 ... 0.12, 0.22 ... 0.32	20 82 005 1214	
preLink®, Circular connectors M12, Screw mounted housing, Empty housing 	0.1 ... 0.12, 0.22 ... 0.32	20 82 000 1210	

M12

Number of contacts

4

preLink® IDC insulation displacement termination
Shielded

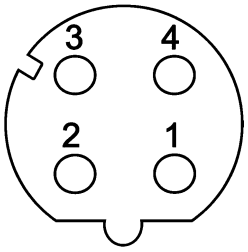

Features

- Ethernet data connector suitable for industry
- Robust design
- 360° shielding
- Category of transmission Cat. 5
- Suitable for termination of massive and flexible wires
- Suitable for all PoE versions
- Very fast preLink® termination technology

Technical characteristics

Number of contacts	4
Limiting temperature	-40 ... +85 °C
Mating cycles	≥500
Locking type	Screw locking, PushPull
Degree of protection acc. to IEC 60529	IP65, IP67
Conductor cross-section	0.1 ... 0.12 mm², 0.22 ... 0.32 mm²
Conductor cross-section	AWG 27 ... AWG 26, AWG 24 ... AWG 22
Cable diameter	5 ... 9.5 mm
Transmission characteristics	Cat. 5, Class D up to 100 MHz
Data rate	10 Mbit/s, 100 Mbit/s
Material (hood/housing)	Zinc die-cast
Surface (hood/housing)	Nickel plated
RoHS	compliant with exemption

Specifications and approvals

IEC 61076-2-101
DNV GL

Details

For Fast Ethernet applications only

Identification	Conductor cross-section (mm²)	Part number Female	Drawing (dimensions in mm)
preLink®, Circular connectors M12, Cable connector, Panel feed through, for rear mounting, preLink® IDC insulation displacement termination, Shielded  Please order terminal module separately	0.1 ... 0.12, 0.22 ... 0.32	20 82 005 2001	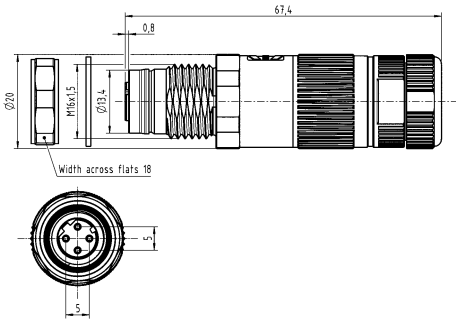

Number of contacts

8

preLink® IDC insulation displacement termination
Shielded

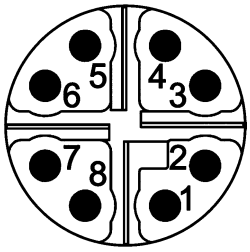

Technical characteristics

Number of contacts	8
Limiting temperature	-40 ... +85 °C
Mating cycles	≥500
Locking type	Screw locking
Degree of protection acc. to IEC 60529	IP65, IP67
Conductor cross-section	0.1 ... 0.12 mm², 0 .22 ... 0.32 mm²
Conductor cross-section	AWG 27 ... AWG 26, AWG 24 ... AWG 22
Cable diameter	5 ... 9.5 mm
Transmission characteristics	Cat. 6_A, Class E_A up to 500 MHz
Data rate	10 Mbit/s, 100 Mbit/s, 1 Gbit/s, 2.5 Gbit/s, 5 Gbit/s, 10 Gbit/s
Material (hood/housing)	Zinc die-cast
Surface (hood/housing)	Nickel plated

Technical characteristics

RoHS	compliant with exemption

Specifications and approvals

UL 1863 DUXR2.E470046
CSA-C22.2 No. 182.4, No. 233-09 DUXR8.E470046
DNV GL

Details

For Ethernet applications up to 10 Gbit only

Identification	Conductor cross-section (mm²)	Part number Male	Drawing (dimensions in mm)
preLink®, Circular connectors M12, Screw mounted housing, Cable connector, preLink® IDC insulation displacement termination, Shielded  Please order terminal module separately	0.1 ... 0.12, 0.22 ... 0.32	20 82 005 0002	

M12

Number of contacts

8

preLink® IDC insulation displacement termination
Shielded

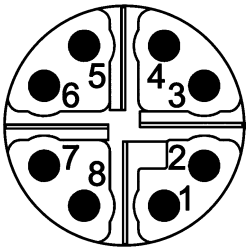

Technical characteristics

Number of contacts	8
Limiting temperature	-40 ... +85 °C
Mating cycles	≥500
Locking type	Screw locking
Degree of protection acc. to IEC 60529	IP65, IP67
Conductor cross-section	0.1 ... 0.12 mm², 0.22 ... 0.32 mm²
Conductor cross-section	AWG 27 ... AWG 26, AWG 24 ... AWG 22
Cable diameter	5 ... 9.5 mm
Transmission characteristics	Cat. 6_A, Class E_A up to 500 MHz
Data rate	10 Mbit/s, 100 Mbit/s, 1 Gbit/s, 2.5 Gbit/s, 5 Gbit/s, 10 Gbit/s
Material (insert)	Zinc die-cast, nickel-plated
Material (hood/housing)	Zinc die-cast

Technical characteristics

RoHS	compliant with exemption, compliant

Specifications and approvals

UL 1863 DUXR2.E470046
CSA-C22.2 No. 182.4, No. 233-09 DUXR8.E470046
DNV GL

Details

For Ethernet applications up to 10 Gbit only

Identification	Conductor cross-section (mm²)	Part number Male	Drawing (dimensions in mm)
preLink®, Circular connectors M12, Connector insert, preLink® IDC insulation displacement termination, Shielded  Please order terminal module separately Please order screw mounted housing separately.	0.1 ... 0.12, 0.22 ... 0.32	20 82 006 1218	
preLink®, Circular connectors M12, Screw mounted housing, Empty housing 	0.1 ... 0.12, 0.22 ... 0.32	20 82 000 1210	

Number of contacts

8

preLink® IDC insulation displacement termination
Shielded

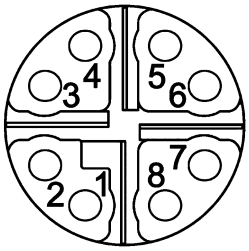

Features

- Ethernet data connector suitable for industry
- Robust design
- 360° shielding
- Category of transmission Cat. 6_A
- Suitable for termination of massive and flexible wires
- Suitable for all PoE versions
- Very fast preLink® termination technology

Technical characteristics

Number of contacts	8
Limiting temperature	-40 ... +85 °C
Mating cycles	≥500
Locking type	Screw locking, PushPull
Degree of protection acc. to IEC 60529	IP65, IP67
Conductor cross-section	0.1 ... 0.12 mm², 0.22 ... 0.32 mm²
Conductor cross-section	AWG 27 ... AWG 26, AWG 24 ... AWG 22
Cable diameter	5 ... 9.5 mm
Transmission characteristics	Cat. 6_A, Class E_A up to 500 MHz
Data rate	10 Mbit/s, 100 Mbit/s, 1 Gbit/s, 2.5 Gbit/s, 5 Gbit/s, 10 Gbit/s
Material (hood/housing)	Zinc die-cast
Surface (hood/housing)	Nickel plated
RoHS	compliant with exemption

Specifications and approvals

IEC 61076-2-109
DNV GL

Details

For Ethernet applications up to 10 Gbit only

Identification	Conductor cross-section (mm²)	Part number Female	Drawing (dimensions in mm)
preLink®, Circular connectors M12, Cable connector, Panel feed through, for rear mounting, preLink® IDC insulation displacement termination, Shielded  Please order terminal module separately	0.1 ... 0.12, 0.22 ... 0.32	20 82 006 2001	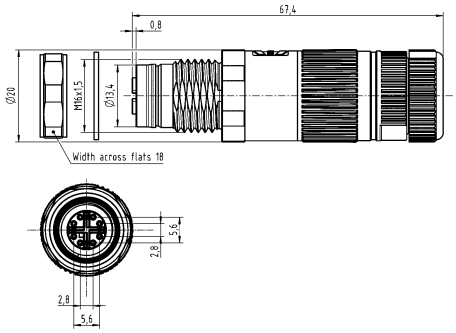

preLink® IDC insulation displacement termination

Technical characteristics

Limiting temperature	-40 ... +85 °C
Mating cycles	≥10
Wire outer diameter	1.3 ... 1.6 mm, 0.8 ... 1.1 mm
Conductor cross-section	0.22 ... 0.32 mm², 0.1 ... 0.12 mm²
Conductor cross-section	AWG 24 ... AWG 22, AWG 27 ... AWG 26
Colour (insert)	Yellow, White, Black
RoHS	compliant

Specifications and approvals

DNV GL
UL 1863 DUXR2.E470046
CSA-C22.2 No. 182.4, No. 233-09 DUXR8.E470046

Identification	Conductor cross-section (mm²)	Part number	Drawing (dimensions in mm)
preLink®, Terminal module, 8-pins, preLink® IDC insulation displacement termination, Conductor diameter 1.3 - 1.6 mm, Pack contents: 10 pieces 	0.22 ... 0.32	20 82 000 0001	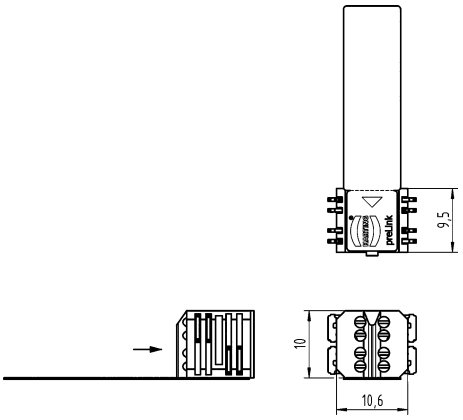
preLink®, Terminal module, 8-pins, preLink® IDC insulation displacement termination, Conductor diameter 0.8 - 1.1 mm, Pack contents: 10 pieces 	0.1 ... 0.12	20 82 000 0003	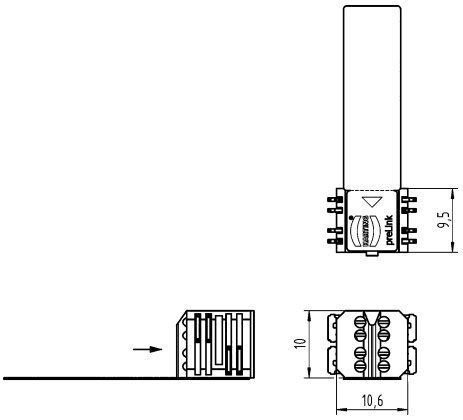

Identification	Conductor cross-section (mm²)	Part number	Drawing (dimensions in mm)
preLink®, Terminal module, 4-pin, AIDA compliant, preLink® IDC insulation displacement termination, Conductor diameter 1.3 - 1.6 mm, Pack contents: 10 pieces 	0.22 ... 0.32	20 82 000 0005	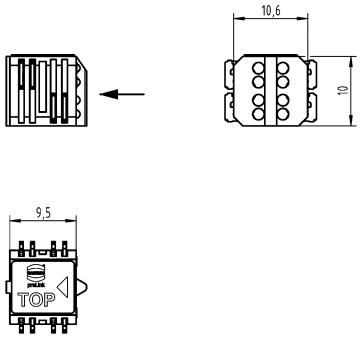
preLink®, Terminal module, 4-pin, AIDA compliant, preLink® IDC insulation displacement termination, Conductor diameter 1.3 - 1.6 mm, Pack contents: 100 pieces 	0.22 ... 0.32	20 82 000 0005 XL	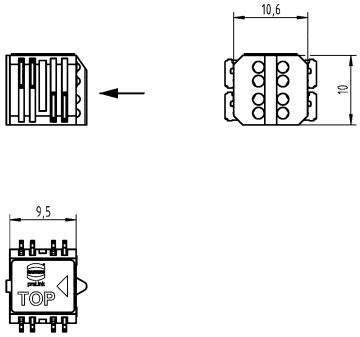

Number of contacts

4

HARAX® connection technology
Shielded

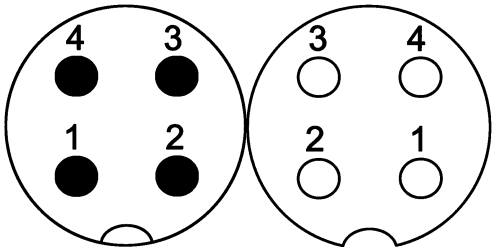

Technical characteristics

Number of contacts	4
Rated current	4 A
Rated voltage	50 V
Rated impulse voltage	1.5 kV
Pollution degree	3
Insulation resistance	>10^8 Ω
Contact resistance	≤10 mΩ
Mating cycles	≥500
Wire outer diameter	≤1.6 mm
Locking type	Screw locking
Degree of protection acc. to IEC 60529	IP65 / IP67, when mated
Conductor cross-section	0.34 mm², 0.14 mm²
Conductor cross-section	AWG 22, AWG 26

Technical characteristics

Cable diameter	5.7 ... 8.8 mm
Tightening torque	0.6 Nm
Material (insert)	Polyamide (PA)
Material (hood/housing)	Zinc die-cast
Material (contacts)	Copper alloy
Surface (contacts)	Gold plated
RoHS	compliant

Specifications and approvals

IEC 61076-2-101
UL 2238 CYJV2.E302521
CSA-C22.2 No. 182.3 CYJV8.E302521

Identification	Conductor cross-section (mm²)	Part number Male	Part number Female	Drawing (dimensions in mm)
Circular connectors M12, Slim Design, Cable connector, Straight, *HARAX*® connection technology, Shielded 	0.14 0.34	21 03 322 1410 21 03 322 1400	21 03 322 2410 21 03 322 2400	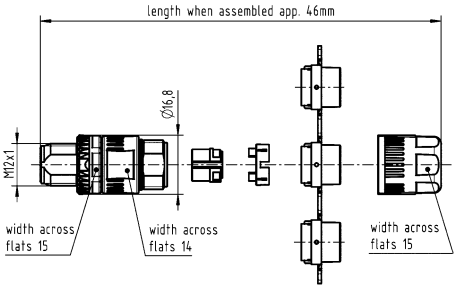 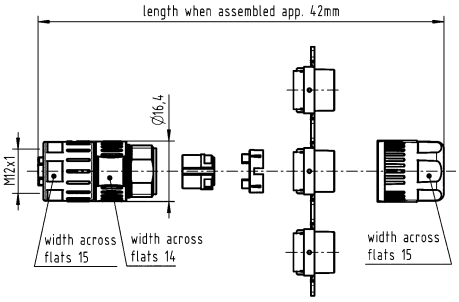

Number of contacts

5

Crimp termination
Shielded

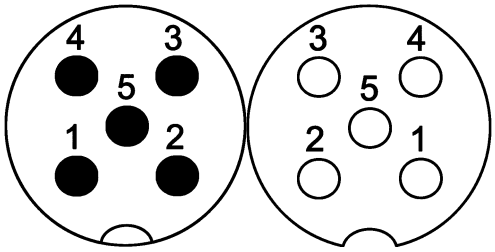

Technical characteristics

Number of contacts	5
Rated current	4 A
Rated impulse voltage	1.5 kV
Pollution degree	3
Rated voltage	48 V AC, 60 V DC
Insulation resistance	>10^8 Ω
Contact resistance	≤10 mΩ
Mating cycles	≥500
Wire outer diameter	≤2.3 mm
Locking type	Screw locking, PushPull
Degree of protection acc. to IEC 60529	IP65 / IP67, when mated
Conductor cross-section	0.13 ... 0.82 mm², 0.09 ... 0.25 mm², 0.13 ... 0.33 mm², 0.25 ... 0.52 mm², 0.33 ... 0.82 mm²

Technical characteristics

Conductor cross-section	AWG 26 ... AWG 18, AWG 28 ... AWG 24, AWG 26 ... AWG 22, AWG 24 ... AWG 20, AWG 22 ... AWG 18
Cable diameter	5.7 ... 8.8 mm
Tightening torque	0.6 Nm, 2 Nm Lock nut
Material (insert)	Liquid crystal polymer (LCP)
Material (hood/housing)	Zinc die-cast
Material (contacts)	Copper alloy
RoHS	compliant, compliant with exemption

Specifications and approvals

IEC 61076-2-101
UL 2238 CYJV2.E302521
CSA-C22.2 No. 182.3 CYJV8.E302521

Identification	Conductor cross-section (mm²)	Part number Male	Part number Female	Drawing (dimensions in mm)
Circular connectors M12, Slim Design, Cable connector, Straight, Crimp termination, Shielded  Please order crimp contacts separately.	0.13 ... 0.82	21 03 821 1505	21 03 821 2505	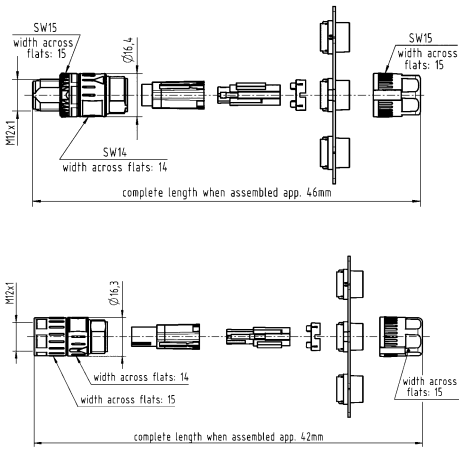

Identification	Conductor cross-section (mm²)	Part number Male	Part number Female	Drawing (dimensions in mm)
Circular connectors M12, Slim Design, Cable connector, Straight, Crimp termination, Shielded, Shield connection with crimp flange  Please order crimp contacts separately. Please order crimp flange set separately.	0.13 ... 0.82	21 03 821 1507	21 03 821 2507	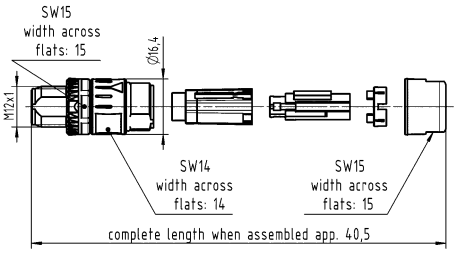 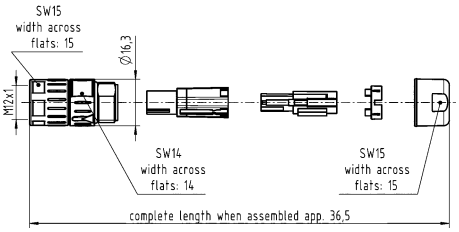
Circular connectors M12, Slim Design, Cable connector, Panel feed through, for rear mounting, Crimp termination, Shielded  Please order crimp contacts separately.	0.13 ... 0.82	21 03 821 1525	21 03 821 2525	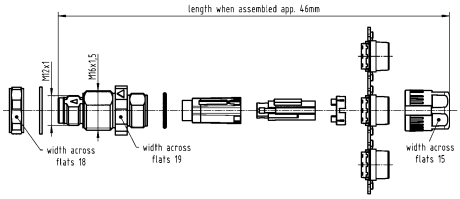 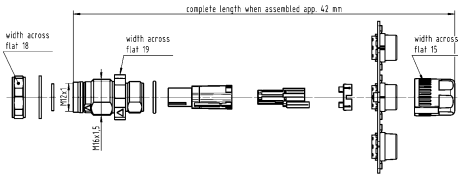
Circular connectors M12, Slim Design, Cable connector, Panel feed through, for rear mounting, Crimp termination, Shielded, Shield connection with crimp flange  Please order crimp contacts separately. Please order crimp flange set separately.	0.13 ... 0.82		21 03 821 2527	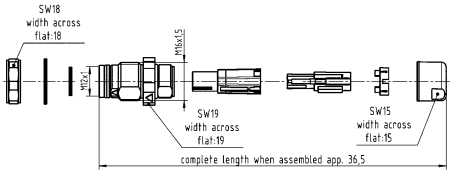

Identification	Conductor cross-section (mm²)	Part number Male	Part number Female	Drawing (dimensions in mm)
Circular connectors M12, Slim Design, Cable connector, Angled, Crimp termination, Shielded  Please order crimp contacts separately.	0.13 ... 0.82	21 03 821 3505	21 03 821 4505	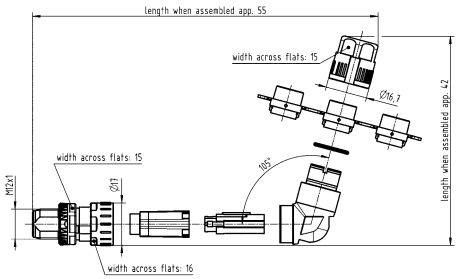 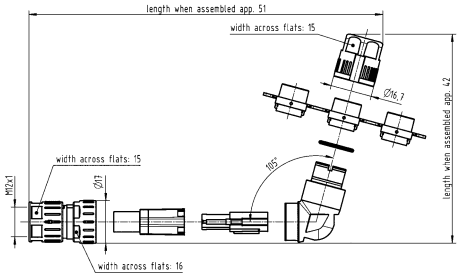
Circular connectors M12, Slim Design, Cable connector, Angled, Crimp termination, Shielded, Shield connection with crimp flange  Please order crimp contacts separately. Please order crimp flange set separately.	0.13 ... 0.82	21 03 821 3507	21 03 821 4507	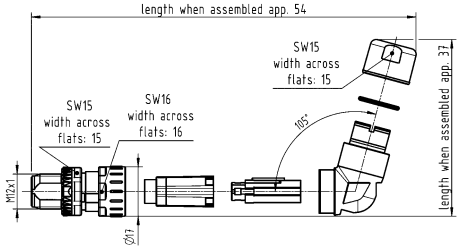 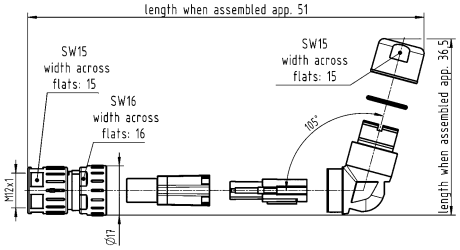
D-Sub, Standard, Crimp contact, Turned contacts 	0.09 ... 0.25 0.13 ... 0.33 0.25 ... 0.52 0.33 ... 0.82	09 67 000 7576 09 67 000 5576 09 67 000 8576 09 67 000 3576	09 67 000 7476 09 67 000 5476 09 67 000 8476 09 67 000 3476	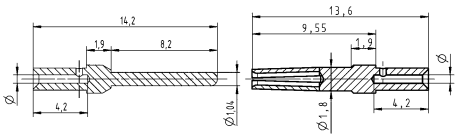 Wire gauge / ø / Stripping length 0.09-0.25 mm² / 0.64 mm / 4 mm 0.13-0.33 mm² / 0.88 mm / 4 mm 0.25-0.52 mm² / 1.13 mm / 4 mm 0.33-0.82 mm² / 1.34 mm / 4 mm for stranded wire according IEC 60228 Class 5

M12

Identification	Conductor cross-section (mm²)	Part number Male	Part number Female	Drawing (dimensions in mm)
Circular connectors M12, Slim Design, Crimp flange set  HARTING offers to test and define the best crimp flange and ferrule combination for customer specific cables.		21 01 010 00xx	21 01 010 00xx	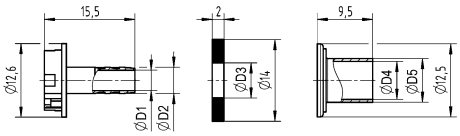

	D1	D2	D3	D4	D5
21 01 010 0017	3.5	4.5	6.0	6.5	7.5
21 01 010 0018	4.5	5.5	6.6	7.5	8.5
21 01 010 0019	4.5	5.5	6.8	8.0	9.0
21 01 010 0020	5.0	6.0	7.8	9.0	10.0
21 01 010 0021	6.5	7.5	8.0	10.0	10.8
21 01 010 0022	5.0	6.0	7.4	9.0	10.0
21 01 010 0024	5.5	6.5	8.8	10.0	10.8

Number of contacts

8

Crimp termination
Shielded

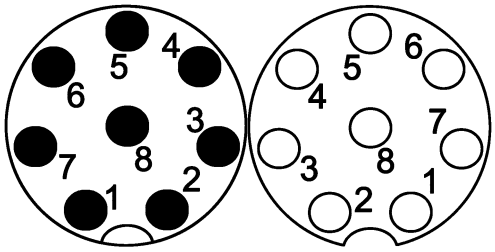

Technical characteristics

Number of contacts	8
Rated current	2 A
Rated impulse voltage	0.8 kV
Pollution degree	3
Rated voltage	30 V AC, 30 V DC
Insulation resistance	>10^8 Ω
Contact resistance	≤10 mΩ
Mating cycles	≥500
Wire outer diameter	≤1.65 mm
Locking type	Screw locking, PushPull
Degree of protection acc. to IEC 60529	IP65 / IP67, when mated
Conductor cross-section	0.13 ... 0.33 mm²
Conductor cross-section	AWG 26 ... AWG 22
Cable diameter	5.7 ... 8.8 mm

Technical characteristics

Tightening torque	0.6 Nm, 2 Nm Lock nut
Material (insert)	Liquid crystal polymer (LCP)
Material (hood/housing)	Zinc die-cast
Material (contacts)	Copper alloy
Surface (contacts)	Gold plated
RoHS	compliant, compliant with exemption

Specifications and approvals

IEC 61076-2-101
UL 2238 CYJV2.E302521
CSA-C22.2 No. 182.3 CYJV8.E302521

Identification	Conductor cross-section (mm²)	Part number Male	Part number Female	Drawing (dimensions in mm)
Circular connectors M12, Slim Design, Cable connector, Straight, Crimp termination, Shielded  Please order crimp contacts separately.	0.13 ... 0.33	21 03 821 1805	21 03 821 2805	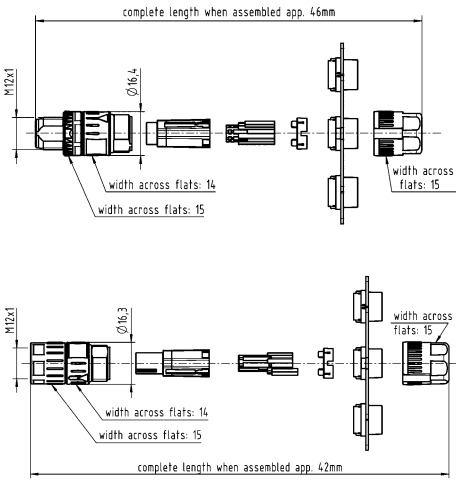

Identification	Conductor cross-section (mm²)	Part number Male	Part number Female	Drawing (dimensions in mm)
Circular connectors M12, Slim Design, Cable connector, Straight, Crimp termination, Shielded, Shield connection with crimp flange  Please order crimp contacts separately. Please order crimp flange set separately.	0.13 ... 0.33	21 03 821 1807	21 03 821 2807	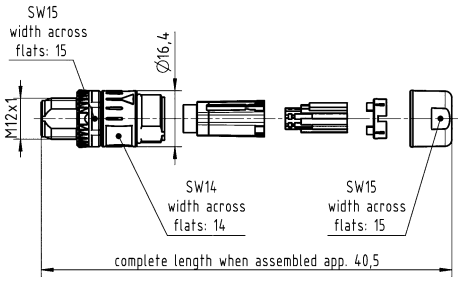 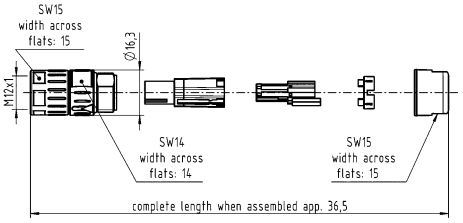
Circular connectors M12, Slim Design, Cable connector, Panel feed through, for rear mounting, Crimp termination, Shielded  Please order crimp contacts separately.	0.13 ... 0.33	21 03 821 1825	21 03 821 2825	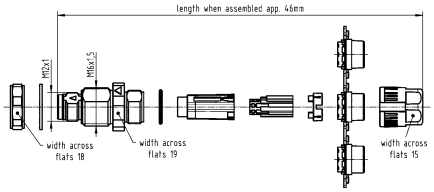 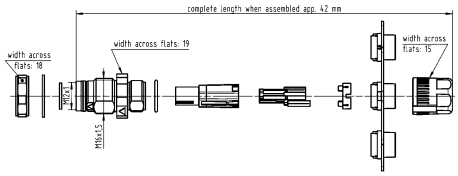
Circular connectors M12, Slim Design, Cable connector, Panel feed through, for rear mounting, Crimp termination, Shielded, Shield connection with crimp flange  Please order crimp contacts separately. Please order crimp flange set separately.	0.13 ... 0.33		21 03 821 2827	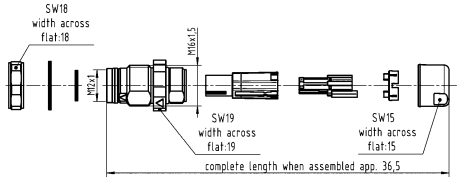

Identification	Conductor cross-section (mm²)	Part number Male	Part number Female	Drawing (dimensions in mm)
Circular connectors M12, Slim Design, Cable connector, Angled, Crimp termination, Shielded  Please order crimp contacts separately.	0.13 ... 0.33	21 03 821 3805	21 03 821 4805	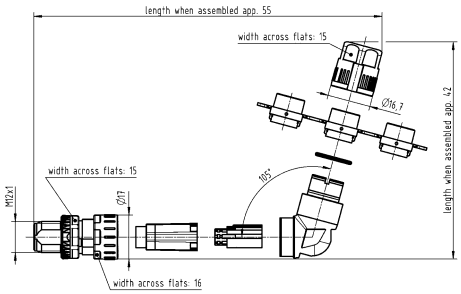 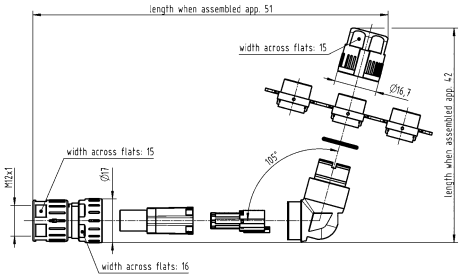
Circular connectors M12, Slim Design, Cable connector, Angled, Crimp termination, Shielded, Shield connection with crimp flange  Please order crimp contacts separately. Please order crimp flange set separately.	0.13 ... 0.33	21 03 821 3807	21 03 821 4807	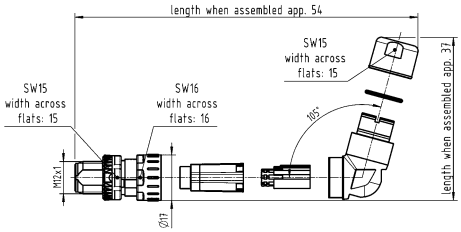 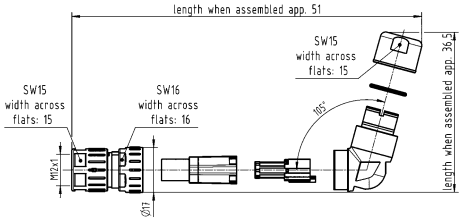
Circular connectors M12, Crimp contact, Turned contacts	0.13 ... 0.33	21 01 100 9020	21 01 100 9025	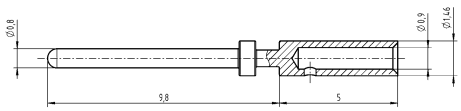 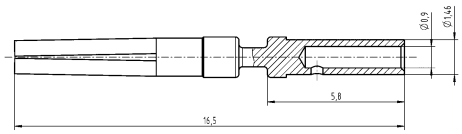

M12

Identification	Conductor cross-section (mm²)	Part number Male	Part number Female	Drawing (dimensions in mm)
Circular connectors M12, Slim Design, Crimp flange set  HARTING offers to test and define the best crimp flange and ferrule combination for customer specific cables.		21 01 010 00xx	21 01 010 00xx	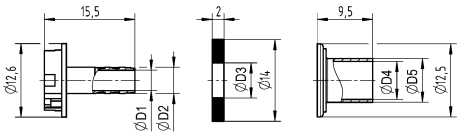

	D1	D2	D3	D4	D5
21 01 010 0017	3.5	4.5	6.0	6.5	7.5
21 01 010 0018	4.5	5.5	6.6	7.5	8.5
21 01 010 0019	4.5	5.5	6.8	8.0	9.0
21 01 010 0020	5.0	6.0	7.8	9.0	10.0
21 01 010 0021	6.5	7.5	8.0	10.0	10.8
21 01 010 0022	5.0	6.0	7.4	9.0	10.0
21 01 010 0024	5.5	6.5	8.8	10.0	10.8

Number of contacts

4

HARAX® connection technology
Shielded

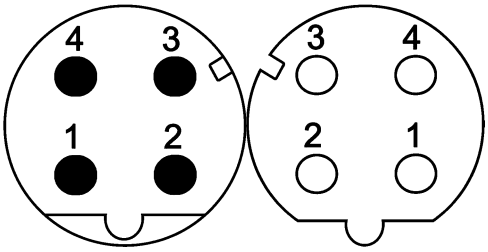

Technical characteristics

Number of contacts	4
Rated current	4 A
Rated voltage	50 V
Rated impulse voltage	1.5 kV
Pollution degree	3
Insulation resistance	>10^8 Ω
Contact resistance	≤10 mΩ
Mating cycles	≥500
Wire outer diameter	≤1.6 mm
Locking type	Screw locking
Degree of protection acc. to IEC 60529	IP65 / IP67, when mated
Conductor cross-section	0.34 mm², 0.14 mm²
Conductor cross-section	AWG 22, AWG 26
Cable diameter	5.7 ... 8.8 mm
Transmission characteristics	Cat. 5, Class D up to 100 MHz
Tightening torque	0.6 Nm
Material (insert)	Polyamide (PA)
Material (hood/housing)	Zinc die-cast

Technical characteristics

Material (contacts)	Copper alloy
Surface (contacts)	Gold plated
RoHS	compliant

Specifications and approvals

IEC 61076-2-101
UL 2238 CYJV2.E302521
CSA-C22.2 No. 182.3 CYJV8.E302521

Details

For Fast Ethernet applications only

Identification	Conductor cross-section (mm²)	Part number Male	Part number Female	Drawing (dimensions in mm)
Circular connectors M12, Slim Design, Cable connector, Straight, *HARAX*® connection technology, Shielded 	0.14 0.34	21 03 382 1410 21 03 382 1400	21 03 382 2410 21 03 382 2400	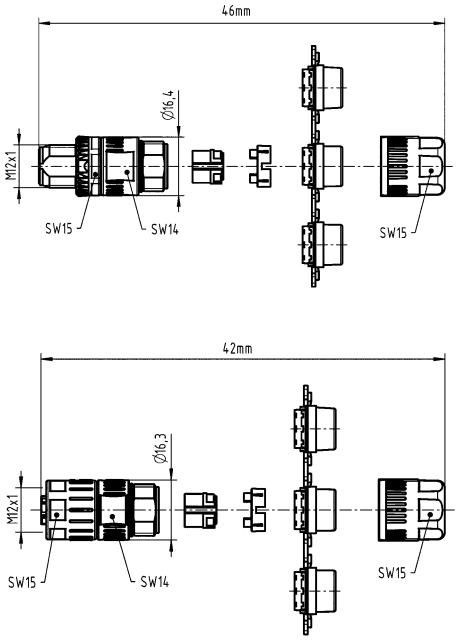

M12

Number of contacts

4

Crimp termination
Shielded

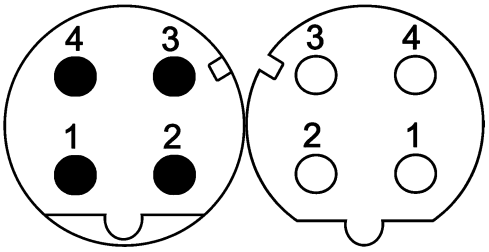

Technical characteristics

Number of contacts	4
Rated current	4 A
Rated impulse voltage	1.5 kV
Pollution degree	3
Rated voltage	48 V AC, 60 V DC
Insulation resistance	>10^8 Ω
Contact resistance	≤10 mΩ
Mating cycles	≥500
Wire outer diameter	≤2.3 mm
Locking type	Screw locking, PushPull
Degree of protection acc. to IEC 60529	IP65 / IP67, when mated
Conductor cross-section	0.13 ... 0.82 mm², 0.09 ... 0.25 mm², 0.13 ... 0.33 mm², 0.25 ... 0.52 mm², 0.33 ... 0.82 mm²
Conductor cross-section	AWG 26 ... AWG 18, AWG 28 ... AWG 24, AWG 26 ... AWG 22, AWG 24 ... AWG 20, AWG 22 ... AWG 18
Cable diameter	5.7 ... 8.8 mm

Technical characteristics

Transmission characteristics	Cat. 5, Class D up to 100 MHz
Tightening torque	0.6 Nm, 2 Nm Lock nut
Material (insert)	Liquid crystal polymer (LCP)
Material (hood/housing)	Zinc die-cast
Material (contacts)	Copper alloy
RoHS	compliant, compliant with exemption

Specifications and approvals

IEC 61076-2-101
UL 2238 CYJV2.E302521
CSA-C22.2 No. 182.3 CYJV8.E302521

Details

For Fast Ethernet applications only

Identification	Conductor cross-section (mm²)	Part number Male	Part number Female	Drawing (dimensions in mm)
Circular connectors M12, Slim Design, Cable connector, Straight, Crimp termination, Shielded  Please order crimp contacts separately.	0.13 ... 0.82	21 03 881 1405	21 03 881 2405	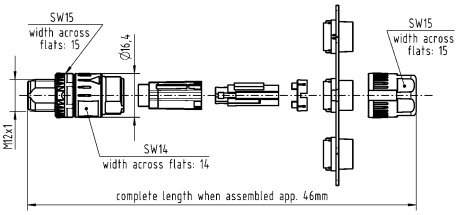 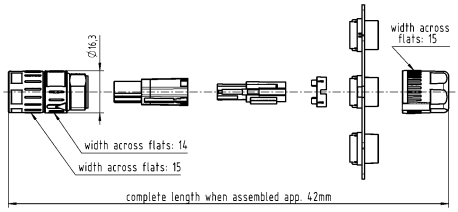

Identification	Conductor cross-section (mm²)	Part number Male	Part number Female	Drawing (dimensions in mm)
Circular connectors M12, Slim Design, Cable connector, Straight, Crimp termination, Shielded, Shield connection with crimp flange  Please order crimp contacts separately. Please order crimp flange set separately.	0.13 ... 0.82	21 03 881 1407	21 03 881 2407	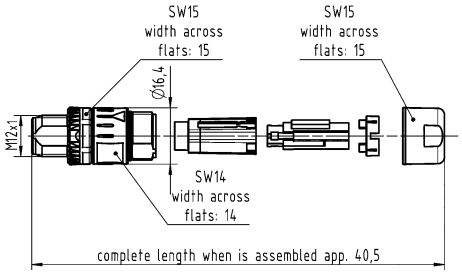 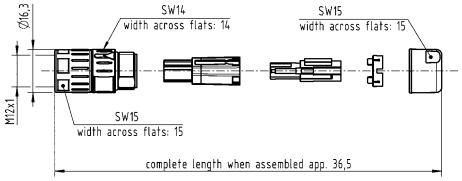
Circular connectors M12, Slim Design, Cable connector, Panel feed through, for rear mounting, Crimp termination, Shielded  Please order crimp contacts separately.	0.13 ... 0.82	21 03 881 1426	21 03 881 2425	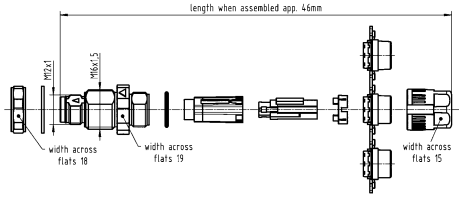 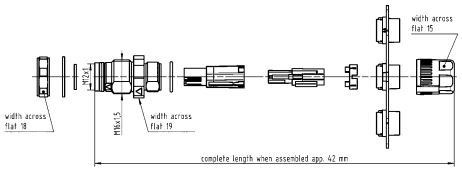
Circular connectors M12, Slim Design, Cable connector, Panel feed through, for rear mounting, Crimp termination, Shielded, Shield connection with crimp flange  Please order crimp contacts separately. Please order crimp flange set separately.	0.13 ... 0.82		21 03 881 2427	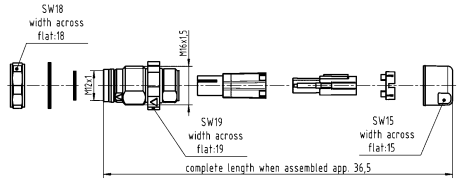

M12

Identification	Conductor cross-section (mm²)	Part number Male	Part number Female	Drawing (dimensions in mm)
Circular connectors M12, Slim Design, Cable connector, Angled, Crimp termination, Shielded  Please order crimp contacts separately.	0.13 ... 0.82	21 03 881 3405	21 03 881 4405	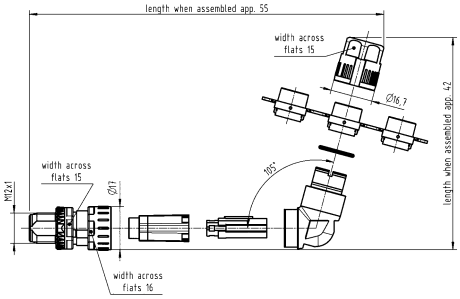 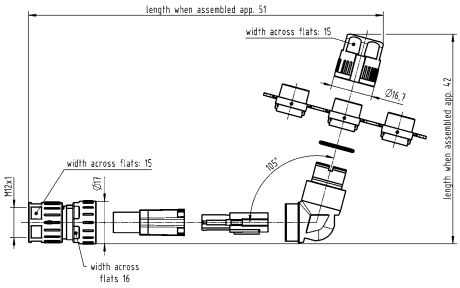
Circular connectors M12, Slim Design, Cable connector, Angled, Crimp termination, Shielded, Shield connection with crimp flange  Please order crimp contacts separately. Please order crimp flange set separately.	0.13 ... 0.82	21 03 881 3407	21 03 881 4407	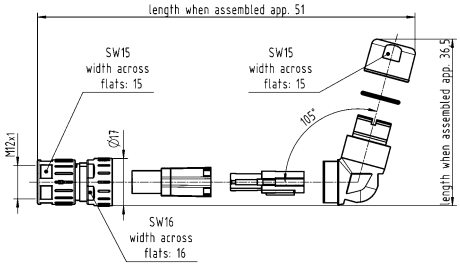
D-Sub, Standard, Crimp contact, Turned contacts 	0.09 ... 0.25 0.13 ... 0.33 0.25 ... 0.52 0.33 ... 0.82	09 67 000 7576 09 67 000 5576 09 67 000 8576 09 67 000 3576	09 67 000 7476 09 67 000 5476 09 67 000 8476 09 67 000 3476	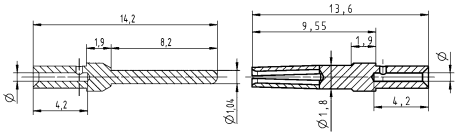

Wire gauge	ø	Stripping length
0.09-0.25 mm²	0.64 mm	4 mm
0.13-0.33 mm²	0.88 mm	4 mm
0.25-0.52 mm²	1.13 mm	4 mm
0.33-0.82 mm²	1.34 mm	4 mm
for stranded wire according IEC 60228 Class 5		

Identification	Conductor cross-section (mm²)	Part number Male	Part number Female	Drawing (dimensions in mm)
Circular connectors M12, Slim Design, Crimp flange set  HARTING offers to test and define the best crimp flange and ferrule combination for customer specific cables.		21 01 010 00xx	21 01 010 00xx	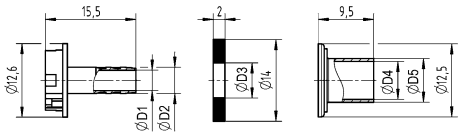

	D1	D2	D3	D4	D5
21 01 010 0017	3.5	4.5	6.0	6.5	7.5
21 01 010 0018	4.5	5.5	6.6	7.5	8.5
21 01 010 0019	4.5	5.5	6.8	8.0	9.0
21 01 010 0020	5.0	6.0	7.8	9.0	10.0
21 01 010 0021	6.5	7.5	8.0	10.0	10.8
21 01 010 0022	5.0	6.0	7.4	9.0	10.0
21 01 010 0024	5.5	6.5	8.8	10.0	10.8

M12

Number of contacts

8

Crimp termination
Shielded

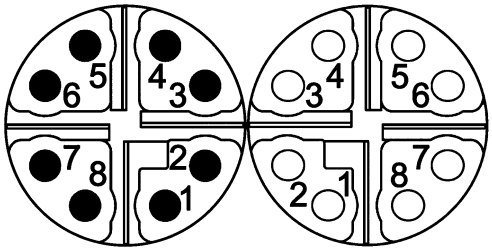

Technical characteristics

Number of contacts	8
Rated current	0.5 A
Rated voltage	48 V
Rated impulse voltage	0.8 kV
Pollution degree	3
Insulation resistance	>10^8 Ω
Contact resistance	≤10 mΩ
Mating cycles	≥500
Wire outer diameter	≤1.4 mm
Locking type	Screw locking, PushPull
Degree of protection acc. to IEC 60529	IP65 / IP67, when mated
Conductor cross-section	0.08 ... 0.25 mm², 0.13 ... 0.25 mm², 0.08 ... 0.22 mm²
Conductor cross-section	AWG 28 ... AWG 23, AWG 26 ... AWG 23, AWG 28 ... AWG 24
Cable diameter	5.7 ... 8.8 mm
Transmission characteristics	Cat. 6_A, Class E_A up to 500 MHz
Tightening torque	0.6 Nm, 2 Nm Lock nut

Technical characteristics

Material (insert)	Liquid crystal polymer (LCP)
Material (hood/housing)	Zinc die-cast
Material (contacts)	Copper alloy
Surface (contacts)	Gold plated
RoHS	compliant, compliant with exemption

Specifications and approvals

IEC 61076-2-109
UL 2238 CYJV2.E302521
CSA-C22.2 No. 182.3 CYJV8.E302521

Details

For Ethernet applications up to 10 Gbit only

Identification	Conductor cross-section (mm²)	Part number Male	Part number Female	Drawing (dimensions in mm)
Circular connectors M12, Slim Design, Cable connector, Straight, Crimp termination, Shielded  Please order crimp contacts separately.	0.08 ... 0.25	21 03 881 1805	21 03 881 2805	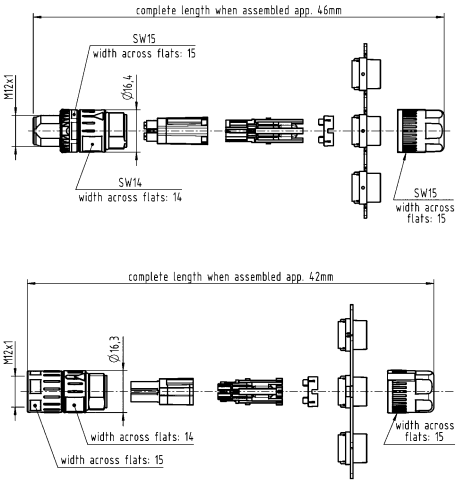

Identification	Conductor cross-section (mm²)	Part number Male	Part number Female	Drawing (dimensions in mm)
Circular connectors M12, Slim Design, Cable connector, Straight, Crimp termination, Shielded, Shield connection with crimp flange  Please order crimp contacts separately. Please order crimp flange set separately.	0.08 ... 0.25	21 03 881 1807	21 03 881 2807	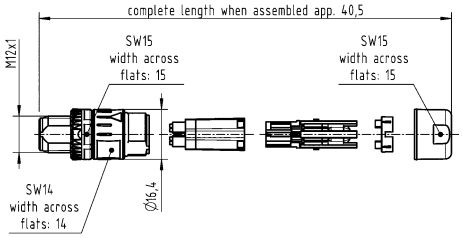 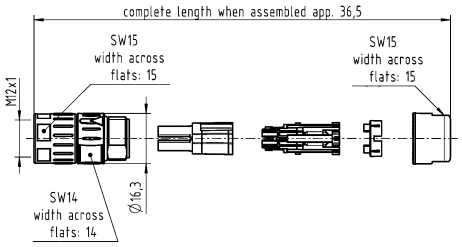
Circular connectors M12, Slim Design, Cable connector, Panel feed through, for rear mounting, Crimp termination, Shielded  Please order crimp contacts separately.	0.08 ... 0.25	21 03 881 1825	21 03 881 2825	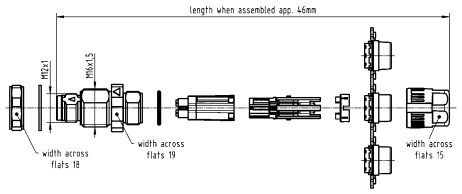 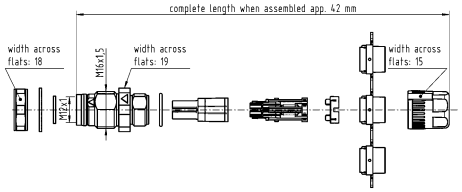
Circular connectors M12, Slim Design, Cable connector, Panel feed through, for rear mounting, Crimp termination, Shielded, Shield connection with crimp flange  Please order crimp contacts separately. Please order crimp flange set separately.	0.08 ... 0.25		21 03 881 2827	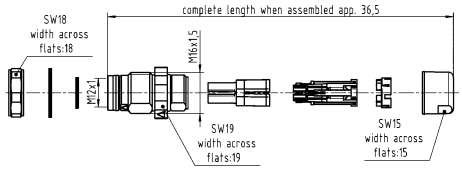

Identification	Conductor cross-section (mm²)	Part number Male	Part number Female	Drawing (dimensions in mm)
Circular connectors M12, Slim Design, Cable connector, Angled, Crimp termination, Shielded  Please order crimp contacts separately.	0.08 ... 0.25	21 03 881 3805	21 03 881 4805	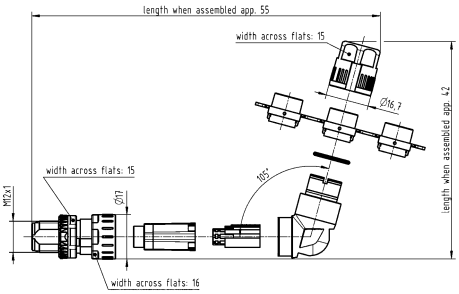 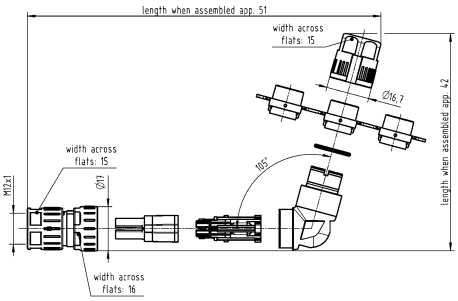
Circular connectors M12, Slim Design, Cable connector, Angled, Crimp termination, Shielded, Shield connection with crimp flange  Please order crimp contacts separately. Please order crimp flange set separately.	0.08 ... 0.25	21 03 881 3807	21 03 881 4807	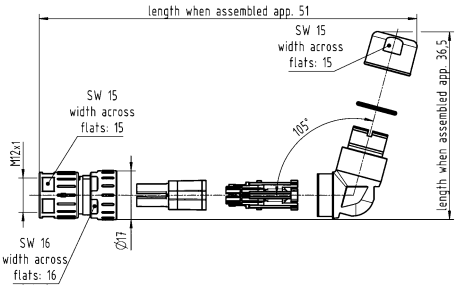
har-speed, Crimp contact, Turned contacts 	0.08 ... 0.22 0.13 ... 0.25	21 01 100 9014 21 01 100 9019	21 01 100 9023 21 01 100 9021	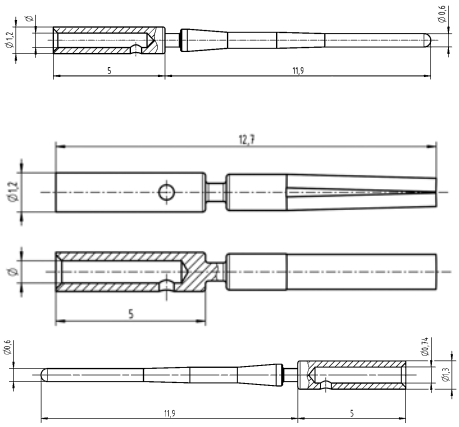

Identification	Conductor cross-section (mm²)	Part number Male	Part number Female	Drawing (dimensions in mm)
Circular connectors M12, Slim Design, Crimp flange set  HARTING offers to test and define the best crimp flange and ferrule combination for customer specific cables.		21 01 010 00xx	21 01 010 00xx	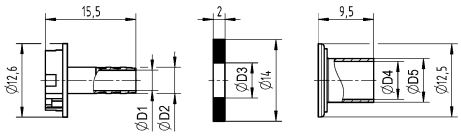

	D1	D2	D3	D4	D5
21 01 010 0017	3.5	4.5	6.0	6.5	7.5
21 01 010 0018	4.5	5.5	6.6	7.5	8.5
21 01 010 0019	4.5	5.5	6.8	8.0	9.0
21 01 010 0020	5.0	6.0	7.8	9.0	10.0
21 01 010 0021	6.5	7.5	8.0	10.0	10.8
21 01 010 0022	5.0	6.0	7.4	9.0	10.0
21 01 010 0024	5.5	6.5	8.8	10.0	10.8

M12

Number of contacts

8

4 Power + 4 Data
Crimp termination
Shielded

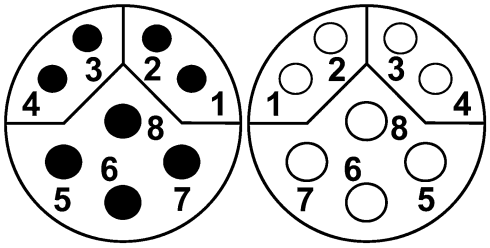

Technical characteristics

Number of contacts	8
Rated current	6 A
Rated voltage	50 V
Rated impulse voltage	1.5 kV
Pollution degree	3
Rated current (data)	0.5 A
Insulation resistance	>10^8 Ω
Contact resistance	≤10 mΩ
Mating cycles	≥100
Locking type	PushPull, Screw locking
Degree of protection acc. to IEC 60529	IP65 / IP67, when mated
Conductor cross-section	0.33 ... 0.82 mm², 0.13 ... 0.25 mm², 0.08 ... 0.22 mm²
Conductor cross-section	AWG 22 ... AWG 18, AWG 26 ... AWG 23, AWG 28 ... AWG 24

Technical characteristics

Cable diameter	5.7 ... 8.8 mm
Tightening torque	0.6 Nm
Material (insert)	Polyamide (PA)
Material (hood/housing)	Zinc die-cast
Material (contacts)	Copper alloy
Surface (contacts)	Gold plated
RoHS	compliant with exemption

Specifications and approvals

IEC 61076-2-113

Details

For Fast Ethernet applications only

Identification	Conductor cross-section (mm²)	Part number Male	Part number Female	Drawing (dimensions in mm)
Circular connectors M12, Slim Design, Cable connector, Straight, Crimp termination, Shielded, PushPull locking Please order crimp contacts separately.		21 03 861 1830		
Circular connectors M12, Slim Design, Cable connector, Straight, Crimp termination, Shielded, Screw locking Please order crimp contacts separately.		21 03 861 1814	21 03 861 2805	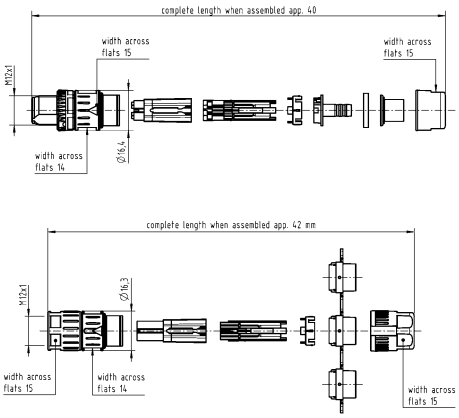

Identification	Conductor cross-section (mm²)	Part number Male	Part number Female	Drawing (dimensions in mm)
Circular connectors M12, Slim Design, Cable connector, Panel feed through, for rear mounting, Crimp termination, Shielded Please order crimp contacts separately.		21 03 861 1825	21 03 861 2825	
Circular connectors M12, Power, Crimp contact, Turned contacts, Pack contents: 50 pieces	0.13 ... 0.25 0.33 ... 0.82	21 01 100 9982 21 01 100 9981	21 01 100 9984 21 01 100 9983	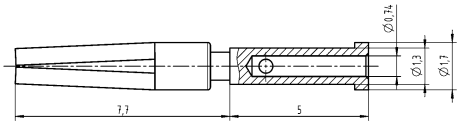
har-speed, Crimp contact, Turned contacts	0.08 ... 0.22 0.13 ... 0.25	21 01 100 9014 21 01 100 9019	21 01 100 9023 21 01 100 9021	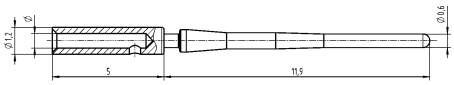 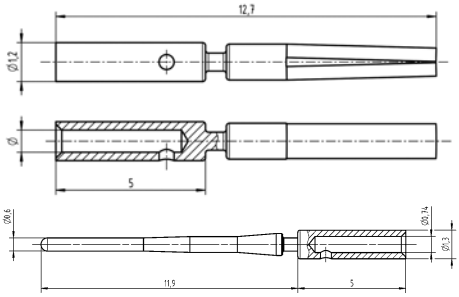

Number of contacts

4

HARAX® connection technology
Shielded

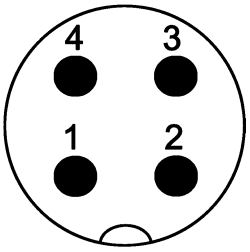

Technical characteristics

Number of contacts	4
Rated current	4 A
Rated voltage	50 V
Rated impulse voltage	1.5 kV
Pollution degree	3
Insulation resistance	>10^8 Ω
Contact resistance	≤10 mΩ
Mating cycles	≥500
Wire outer diameter	≤1.6 mm
Locking type	PushPull
Degree of protection acc. to IEC 60529	IP65 / IP67, when mated
Conductor cross-section	0.34 mm², 0.14 mm²
Conductor cross-section	AWG 22, AWG 26

Technical characteristics

Cable diameter	5.7 ... 8.8 mm
Material (insert)	Polyamide (PA)
Material (hood/housing)	Zinc die-cast
Material (contacts)	Copper alloy
Surface (contacts)	Gold plated
RoHS	compliant with exemption

Specifications and approvals

IEC 61076-2-101
UL 2238 CYJV2.E302521
CSA-C22.2 No. 182.3 CYJV8.E302521

Identification	Conductor cross-section (mm²)	Part number Male	Drawing (dimensions in mm)
Circular connectors M12, PushPull, Cable connector, Straight, *HARAX*® connection technology, Shielded 	0.14 0.34	21 03 322 1411 21 03 322 1401	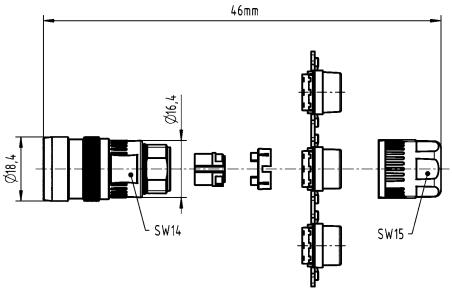

Number of contacts

5

Crimp termination
Shielded

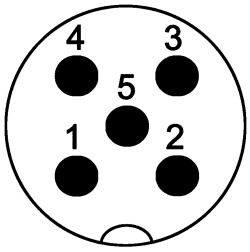

Technical characteristics

Number of contacts	5
Rated current	4 A
Rated impulse voltage	1.5 kV
Pollution degree	3
Rated voltage	48 V AC, 60 V DC
Insulation resistance	>10^8 Ω
Contact resistance	≤10 mΩ
Mating cycles	≥500
Wire outer diameter	≤2.3 mm
Locking type	PushPull
Degree of protection acc. to IEC 60529	IP65 / IP67, when mated
Conductor cross-section	0.13 ... 0.82 mm², 0.09 ... 0.25 mm², 0.13 ... 0.33 mm², 0.25 ... 0.52 mm², 0.33 ... 0.82 mm²

Technical characteristics

Conductor cross-section	AWG 26 ... AWG 18, AWG 28 ... AWG 24, AWG 26 ... AWG 22, AWG 24 ... AWG 20, AWG 22 ... AWG 18
Cable diameter	5.7 ... 8.8 mm
Material (insert)	Liquid crystal polymer (LCP)
Material (hood/housing)	Zinc die-cast
Material (contacts)	Copper alloy
RoHS	compliant with exemption

Specifications and approvals

IEC 61076-2-101
UL 2238 CYJV2.E302521
CSA-C22.2 No. 182.3 CYJV8.E302521

Identification	Conductor cross-section (mm²)	Part number Male	Part number Female	Drawing (dimensions in mm)
Circular connectors M12, PushPull, Cable connector, Straight, Crimp termination, Shielded  Please order crimp contacts separately.	0.13 ... 0.82	21 03 821 1530		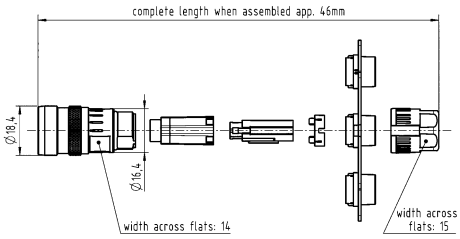
Circular connectors M12, PushPull, Cable connector, Straight, Crimp termination, Shielded, Shield connection with crimp flange  Please order crimp contacts separately. Please order crimp flange set separately.	0.13 ... 0.82	21 03 821 1533		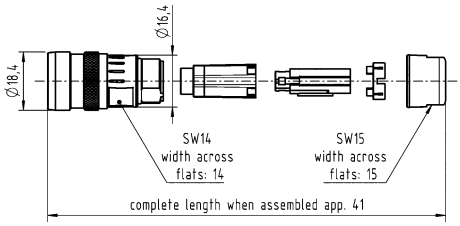

M12

Identification	Conductor cross-section (mm²)	Part number Male	Part number Female	Drawing (dimensions in mm)
Circular connectors M12, PushPull, Cable connector, Angled, Crimp termination, Shielded  Please order crimp contacts separately.	0.13 ... 0.82	21 03 821 3530		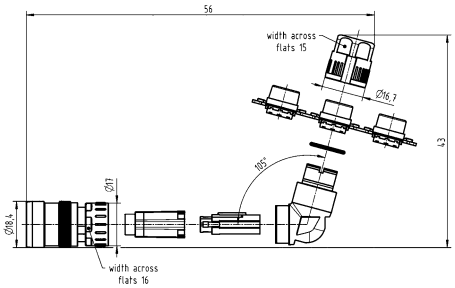
Circular connectors M12, PushPull, Cable connector, Angled, Crimp termination, Shielded, Shield connection with crimp flange  Please order crimp contacts separately. Please order crimp flange set separately.	0.13 ... 0.82	21 03 821 3533		
D-Sub, Standard, Crimp contact, Turned contacts 	0.09 ... 0.25 0.13 ... 0.33 0.25 ... 0.52 0.33 ... 0.82	09 67 000 7576 09 67 000 5576 09 67 000 8576 09 67 000 3576	09 67 000 7476 09 67 000 5476 09 67 000 8476 09 67 000 3476	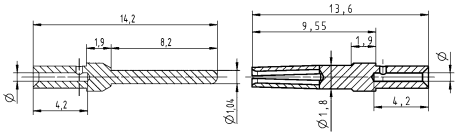
Circular connectors M12, Slim Design, Crimp flange set  HARTING offers to test and define the best crimp flange and ferrule combination for customer specific cables.		21 01 010 00xx	21 01 010 00xx	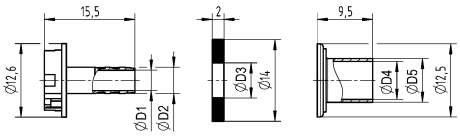

Wire gauge	ø	Stripping length
0.09-0.25 mm²	0.64 mm	4 mm
0.13-0.33 mm²	0.88 mm	4 mm
0.25-0.52 mm²	1.13 mm	4 mm
0.33-0.82 mm²	1.34 mm	4 mm
for stranded wire according IEC 60228 Class 5		

	D1	D2	D3	D4	D5
21 01 010 0017	3.5	4.5	6.0	6.5	7.5
21 01 010 0018	4.5	5.5	6.6	7.5	8.5
21 01 010 0019	4.5	5.5	6.8	8.0	9.0
21 01 010 0020	5.0	6.0	7.8	9.0	10.0
21 01 010 0021	6.5	7.5	8.0	10.0	10.8
21 01 010 0022	5.0	6.0	7.4	9.0	10.0
21 01 010 0024	5.5	6.5	8.8	10.0	10.8

Number of contacts

8

Crimp termination
Shielded

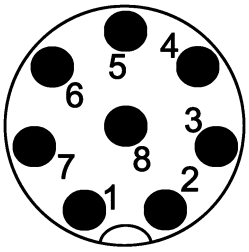

Technical characteristics

Number of contacts	8
Rated current	2 A
Rated impulse voltage	0.8 kV
Pollution degree	3
Rated voltage	30 V AC, 30 V DC
Insulation resistance	>10^8 Ω
Contact resistance	≤10 mΩ
Mating cycles	≥500
Wire outer diameter	≤1.65 mm
Locking type	PushPull
Degree of protection acc. to IEC 60529	IP65 / IP67, when mated
Conductor cross-section	0.13 ... 0.33 mm²
Conductor cross-section	AWG 26 ... AWG 22

Technical characteristics

Cable diameter	5.7 ... 8.8 mm
Material (insert)	Liquid crystal polymer (LCP)
Material (hood/housing)	Zinc die-cast
Material (contacts)	Copper alloy
Surface (contacts)	Gold plated
RoHS	compliant with exemption

Specifications and approvals

IEC 61076-2-101
UL 2238 CYJV2.E302521
CSA-C22.2 No. 182.3 CYJV8.E302521

Identification	Conductor cross-section (mm²)	Part number Male	Part number Female	Drawing (dimensions in mm)
Circular connectors M12, PushPull, Cable connector, Straight, Crimp termination, Shielded  Please order crimp contacts separately.	0.13 ... 0.33	21 03 821 1830		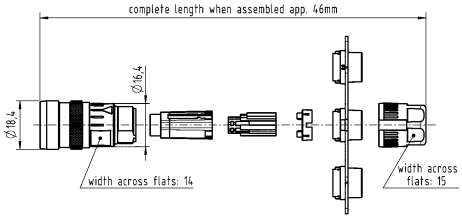
Circular connectors M12, PushPull, Cable connector, Straight, Crimp termination, Shielded, Shield connection with crimp flange  Please order crimp contacts separately. Please order crimp flange set separately.	0.13 ... 0.33	21 03 821 1833		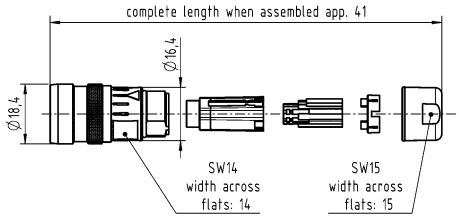

M12

Identification	Conductor cross-section (mm²)	Part number Male	Part number Female	Drawing (dimensions in mm)
Circular connectors M12, PushPull, Cable connector, Angled, Crimp termination, Shielded  Please order crimp contacts separately.	0.13 ... 0.33	21 03 821 3830		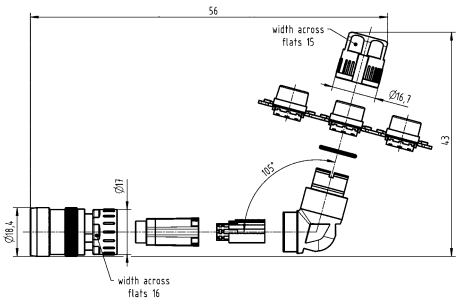
Circular connectors M12, PushPull, Cable connector, Angled, Crimp termination, Shielded, Shield connection with crimp flange  Please order crimp contacts separately. Please order crimp flange set separately.	0.13 ... 0.33	21 03 821 3833		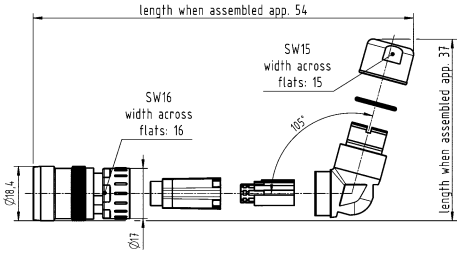
Circular connectors M12, Crimp contact, Turned contacts	0.13 ... 0.33	21 01 100 9020	21 01 100 9025	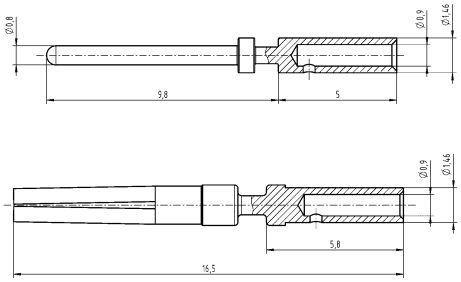
Circular connectors M12, Slim Design, Crimp flange set  HARTING offers to test and define the best crimp flange and ferrule combination for customer specific cables.		21 01 010 00xx	21 01 010 00xx	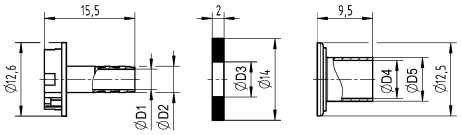

	D1	D2	D3	D4	D5
21 01 010 0017	3.5	4.5	6.0	6.5	7.5
21 01 010 0018	4.5	5.5	6.6	7.5	8.5
21 01 010 0019	4.5	5.5	6.8	8.0	9.0
21 01 010 0020	5.0	6.0	7.8	9.0	10.0
21 01 010 0021	6.5	7.5	8.0	10.0	10.8
21 01 010 0022	5.0	6.0	7.4	9.0	10.0
21 01 010 0024	5.5	6.5	8.8	10.0	10.8

Number of contacts

4

HARAX® connection technology
Shielded

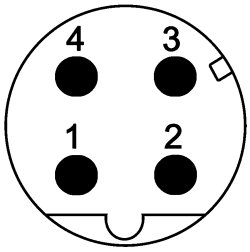

Technical characteristics

Number of contacts	4
Rated current	4 A
Rated voltage	50 V
Rated impulse voltage	1.5 kV
Pollution degree	3
Insulation resistance	>10^8 Ω
Contact resistance	≤10 mΩ
Mating cycles	≥500
Wire outer diameter	≤1.6 mm
Locking type	PushPull
Degree of protection acc. to IEC 60529	IP65 / IP67, when mated
Conductor cross-section	0.34 mm², 0.14 mm²
Conductor cross-section	AWG 22, AWG 26
Cable diameter	5.7 ... 8.8 mm
Transmission characteristics	Cat. 5, Class D up to 100 MHz
Material (insert)	Polyamide (PA)
Material (hood/housing)	Zinc die-cast

Technical characteristics

Material (contacts)	Copper alloy
Surface (contacts)	Gold plated
RoHS	compliant with exemption

Specifications and approvals

IEC 61076-2-101
UL 2238 CYJV2.E302521
CSA-C22.2 No. 182.3 CYJV8.E302521

Details

For Fast Ethernet applications only

Identification	Conductor cross-section (mm²)	Part number Male	Drawing (dimensions in mm)
Circular connectors M12, PushPull, Cable connector, Straight, *HARAX*® connection technology, Shielded 	0.14 0.34	21 03 382 1411 21 03 382 1401	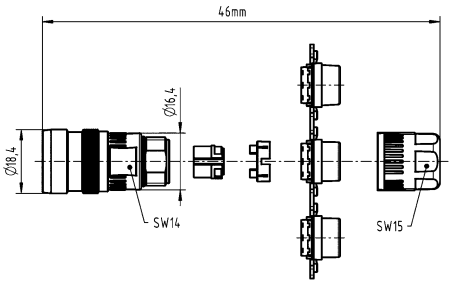

M12

Number of contacts

4

Crimp termination
Shielded

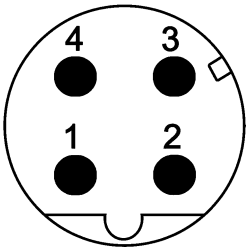

Technical characteristics

Number of contacts	4
Rated current	4 A
Rated impulse voltage	1.5 kV
Pollution degree	3
Rated voltage	48 V AC, 60 V DC
Insulation resistance	>10^8 Ω
Contact resistance	≤10 mΩ
Mating cycles	≥500
Wire outer diameter	≤2.3 mm
Locking type	PushPull
Degree of protection acc. to IEC 60529	IP65 / IP67, when mated
Conductor cross-section	0.13 ... 0.82 mm², 0.09 ... 0.25 mm², 0.13 ... 0.33 mm², 0.25 ... 0.52 mm², 0.33 ... 0.82 mm²
Conductor cross-section	AWG 26 ... AWG 18, AWG 28 ... AWG 24, AWG 26 ... AWG 22, AWG 24 ... AWG 20, AWG 22 ... AWG 18

Technical characteristics

Cable diameter	5.7 ... 8.8 mm
Transmission characteristics	Cat. 5, Class D up to 100 MHz
Material (insert)	Liquid crystal polymer (LCP)
Material (hood/housing)	Zinc die-cast
Material (contacts)	Copper alloy
RoHS	compliant with exemption

Specifications and approvals

IEC 61076-2-101
UL 2238 CYJV2.E302521
CSA-C22.2 No. 182.3 CYJV8.E302521

Details

For Fast Ethernet applications only

Identification	Conductor cross-section (mm²)	Part number Male	Part number Female	Drawing (dimensions in mm)
Circular connectors M12, PushPull, Cable connector, Straight, Crimp termination, Shielded  Please order crimp contacts separately.	0.13 ... 0.82	21 03 881 1430		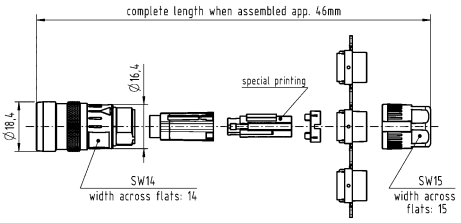
Circular connectors M12, PushPull, Cable connector, Straight, Crimp termination, Shielded, Shield connection with crimp flange  Please order crimp contacts separately. Please order crimp flange set separately.	0.13 ... 0.82	21 03 881 1433		

Identification	Conductor cross-section (mm²)	Part number Male	Part number Female	Drawing (dimensions in mm)
Circular connectors M12, PushPull, Cable connector, Angled, Crimp termination, Shielded  Please order crimp contacts separately.	0.13 ... 0.82	21 03 881 3430		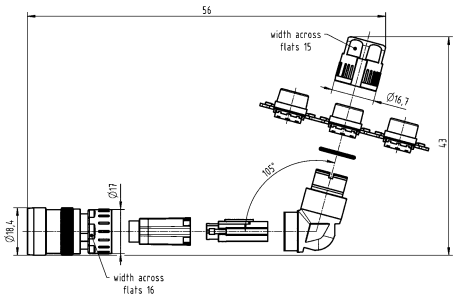
Circular connectors M12, PushPull, Cable connector, Angled, Crimp termination, Shielded, Shield connection with crimp flange  Please order crimp contacts separately. Please order crimp flange set separately.	0.13 ... 0.82	21 03 881 3433		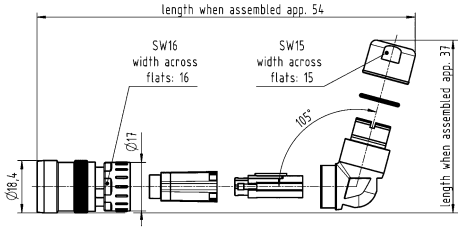
D-Sub, Standard, Crimp contact, Turned contacts 	0.09 ... 0.25 0.13 ... 0.33 0.25 ... 0.52 0.33 ... 0.82	09 67 000 7576 09 67 000 5576 09 67 000 8576 09 67 000 3576	09 67 000 7476 09 67 000 5476 09 67 000 8476 09 67 000 3476	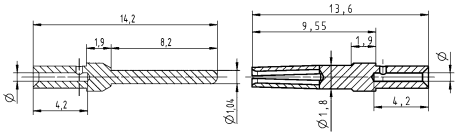
Circular connectors M12, Slim Design, Crimp flange set  HARTING offers to test and define the best crimp flange and ferrule combination for customer specific cables.		21 01 010 00xx	21 01 010 00xx	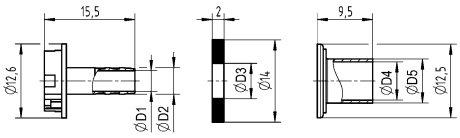

Wire gauge	ø	Stripping length
0.09-0.25 mm²	0.64 mm	4 mm
0.13-0.33 mm²	0.88 mm	4 mm
0.25-0.52 mm²	1.13 mm	4 mm
0.33-0.82 mm²	1.34 mm	4 mm
for stranded wire according IEC 60228 Class 5		

	D1	D2	D3	D4	D5
21 01 010 0017	3.5	4.5	6.0	6.5	7.5
21 01 010 0018	4.5	5.5	6.6	7.5	8.5
21 01 010 0019	4.5	5.5	6.8	8.0	9.0
21 01 010 0020	5.0	6.0	7.8	9.0	10.0
21 01 010 0021	6.5	7.5	8.0	10.0	10.8
21 01 010 0022	5.0	6.0	7.4	9.0	10.0
21 01 010 0024	5.5	6.5	8.8	10.0	10.8

M12

Number of contacts

8

Crimp termination
Shielded

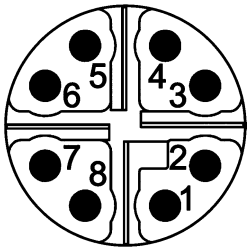

Technical characteristics

Number of contacts	8
Rated current	0.5 A
Rated voltage	48 V
Rated impulse voltage	0.8 kV
Pollution degree	3
Insulation resistance	>10^8 Ω
Contact resistance	≤10 mΩ
Mating cycles	≥500
Wire outer diameter	≤1.4 mm
Locking type	PushPull
Degree of protection acc. to IEC 60529	IP65 / IP67, when mated
Conductor cross-section	0.08 ... 0.25 mm², 0.13 ... 0.25 mm², 0.08 ... 0.22 mm²
Conductor cross-section	AWG 28 ... AWG 23, AWG 26 ... AWG 23, AWG 28 ... AWG 24
Cable diameter	5.7 ... 8.8 mm
Transmission characteristics	Cat. 6_A, Class E_A up to 500 MHz

Technical characteristics

Material (insert)	Liquid crystal polymer (LCP)
Material (hood/housing)	Zinc die-cast
Material (contacts)	Copper alloy
Surface (contacts)	Gold plated
RoHS	compliant with exemption

Specifications and approvals

IEC 61076-2-109
UL 2238 CYJV2.E302521
CSA-C22.2 No. 182.3 CYJV8.E302521

Details

For Ethernet applications up to 10 Gbit only

Identification	Conductor cross-section (mm²)	Part number Male	Part number Female	Drawing (dimensions in mm)
Circular connectors M12, PushPull, Cable connector, Straight, Crimp termination, Shielded  Please order crimp contacts separately.	0.08 ... 0.25	21 03 881 1830		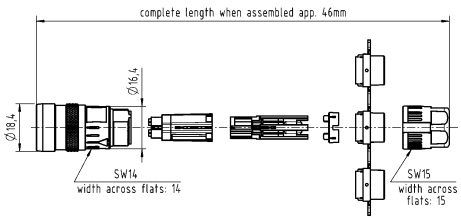
Circular connectors M12, PushPull, Cable connector, Straight, Crimp termination, Shielded, Shield connection with crimp flange  Please order crimp contacts separately. Please order crimp flange set separately.	0.08 ... 0.25	21 03 881 1833		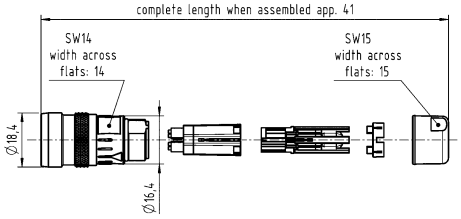

Identification	Conductor cross-section (mm²)	Part number Male	Part number Female	Drawing (dimensions in mm)
Circular connectors M12, PushPull, Cable connector, Angled, Crimp termination, Shielded  Please order crimp contacts separately.	0.08 ... 0.25	21 03 881 3830		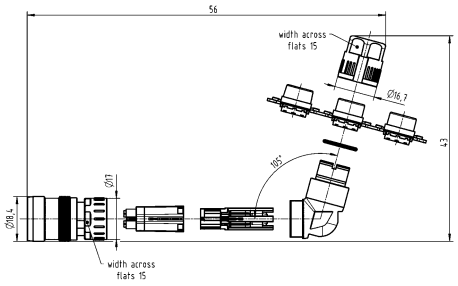
Circular connectors M12, PushPull, Cable connector, Angled, Crimp termination, Shielded, Shield connection with crimp flange  Please order crimp contacts separately. Please order crimp flange set separately.	0.08 ... 0.25	21 03 881 3833		
har-speed, Crimp contact, Turned contacts	0.08 ... 0.22 0.13 ... 0.25	21 01 100 9014 21 01 100 9019	21 01 100 9023 21 01 100 9021	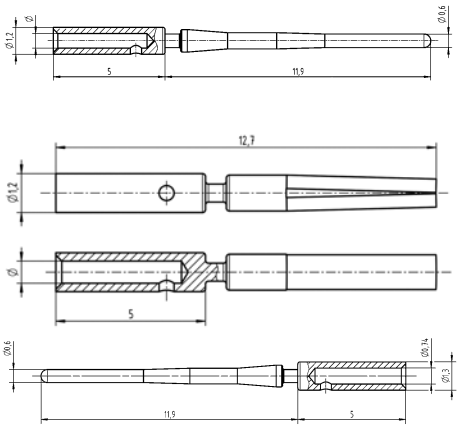
Circular connectors M12, Slim Design, Crimp flange set  HARTING offers to test and define the best crimp flange and ferrule combination for customer specific cables.		21 01 010 00xx	21 01 010 00xx	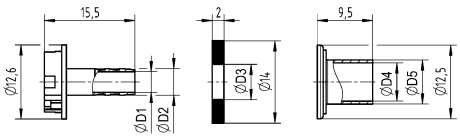

	D1	D2	D3	D4	D5
21 01 010 0017	3.5	4.5	6.0	6.5	7.5
21 01 010 0018	4.5	5.5	6.6	7.5	8.5
21 01 010 0019	4.5	5.5	6.8	8.0	9.0
21 01 010 0020	5.0	6.0	7.8	9.0	10.0
21 01 010 0021	6.5	7.5	8.0	10.0	10.8
21 01 010 0022	5.0	6.0	7.4	9.0	10.0
21 01 010 0024	5.5	6.5	8.8	10.0	10.8

Number of contacts

4+ ⏚

Crimp termination
Shielded

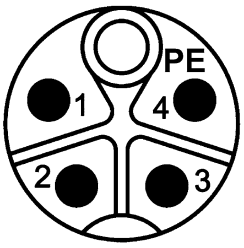

Technical characteristics

Number of contacts	4
Rated current	12 A
Rated voltage	630 V
Rated impulse voltage	6 kV
Pollution degree	3
Insulation resistance	>10^8 Ω
Contact resistance	≤10 mΩ
Mating cycles	≥500
Locking type	PushPull
Degree of protection acc. to IEC 60529	IP65 / IP67, when mated
Conductor cross-section	0.5 ... 2.5 mm², 2.5 mm², 1.5 mm², 0.75 mm², 0.5 mm²

Technical characteristics

Conductor cross-section	AWG 20 ... AWG 14, AWG 14, AWG 16, AWG 19, AWG 21
Cable diameter	5.8 ... 13.5 mm
Tightening torque	0.6 Nm
Material (insert)	Polyamide (PA)
Material (hood/housing)	Zinc die-cast
Material (contacts)	Copper alloy
Surface (contacts)	Gold plated

Specifications and approvals

IEC 61076-2-111

Identification	Conductor cross-section (mm²)	Part number Male	Part number Female	Drawing (dimensions in mm)
Circular connectors M12, Power, PushPull, Cable connector, Straight, Crimp termination, Shielded, PushPull locking  Please order crimp contacts separately.	0.5 ... 2.5	21 03 896 1525	21 03 896 2525	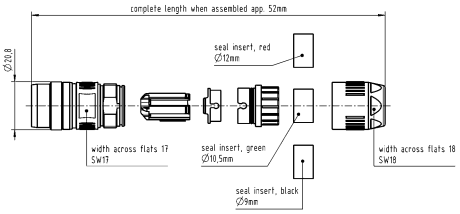
Circular connectors M12, Power, Crimp contact, Turned contacts, Pack contents: 50 pieces	0.5 0.75 1.5 2.5	21 01 100 9962 21 01 100 9963 21 01 100 9937 21 01 100 9938	21 01 100 9964 21 01 100 9965 21 01 100 9939 21 01 100 9940	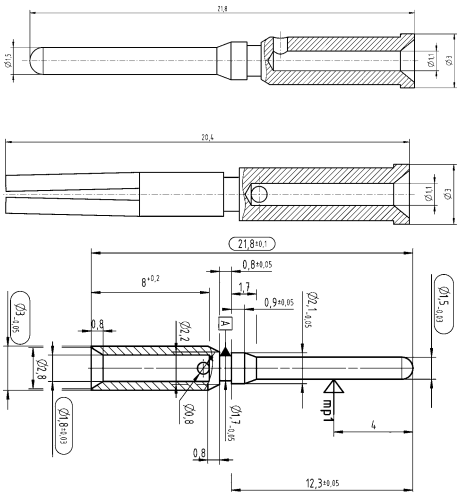

Number of contacts

4

Crimp termination
Shielded

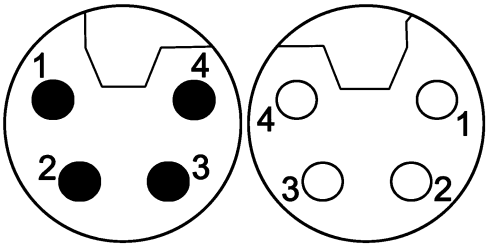

Technical characteristics

Number of contacts	4
Rated current	16 A
Rated voltage	63 V
Rated impulse voltage	1.5 kV
Pollution degree	3
Insulation resistance	>10^8 Ω
Contact resistance	≤10 mΩ
Mating cycles	≥500
Locking type	PushPull
Degree of protection acc. to IEC 60529	IP65 / IP67, when mated
Conductor cross-section	2.5 mm², 1.5 mm², 0.75 mm², 0.5 mm²
Conductor cross-section	AWG 14, AWG 16, AWG 19, AWG 21

Technical characteristics

Cable diameter	5.8 ... 13.5 mm
Tightening torque	0.6 Nm
Material (insert)	Polyamide (PA)
Material (hood/housing)	Zinc die-cast
Material (contacts)	Copper alloy
Surface (contacts)	Gold plated

Specifications and approvals

IEC 61076-2-111

Identification	Conductor cross-section (mm²)	Part number Male	Part number Female	Drawing (dimensions in mm)
Circular connectors M12, Power, PushPull, Cable connector, Straight, Crimp termination, Shielded, PushPull locking Please order crimp contacts separately.		21 03 896 1420	21 03 896 2420	
Circular connectors M12, Power, Crimp contact, Turned contacts, Pack contents: 50 pieces	0.5 0.75 1.5 2.5	21 01 100 9962 21 01 100 9963 21 01 100 9937 21 01 100 9938	21 01 100 9964 21 01 100 9965 21 01 100 9939 21 01 100 9940	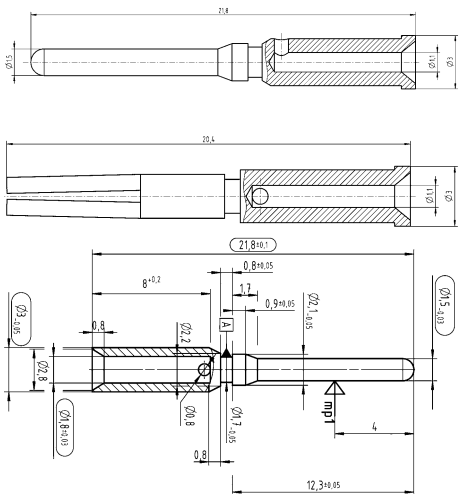

Number of contacts

4+

Crimp termination
Shielded

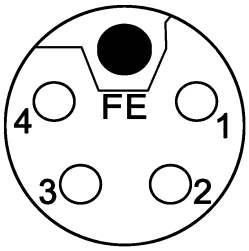

Technical characteristics

Number of contacts	4
Rated current	16 A
Rated voltage	63 V
Rated impulse voltage	1.5 kV
Pollution degree	3
Insulation resistance	>10^8 Ω
Contact resistance	≤10 mΩ
Mating cycles	≥500
Locking type	PushPull
Degree of protection acc. to IEC 60529	IP65 / IP67, when mated
Conductor cross-section	2.5 mm², 1.5 mm², 0.75 mm², 0.5 mm²
Conductor cross-section	AWG 14, AWG 16, AWG 19, AWG 21

Technical characteristics

Cable diameter	5.8 ... 13.5 mm
Tightening torque	0.6 Nm
Material (insert)	Polyamide (PA)
Material (hood/housing)	Zinc die-cast
Material (contacts)	Copper alloy
Surface (contacts)	Gold plated

Specifications and approvals

IEC 61076-2-111

Identification	Conductor cross-section (mm²)	Part number Male	Part number Female	Drawing (dimensions in mm)
Circular connectors M12, Power, PushPull, Cable connector, Straight, Crimp termination, Shielded, PushPull locking Please order crimp contacts separately.		21 03 896 1520	21 03 896 2520	
Circular connectors M12, Power, Crimp contact, Turned contacts, Pack contents: 50 pieces	0.5 0.75 1.5 2.5	21 01 100 9962 21 01 100 9963 21 01 100 9937 21 01 100 9938	21 01 100 9964 21 01 100 9965 21 01 100 9939 21 01 100 9940	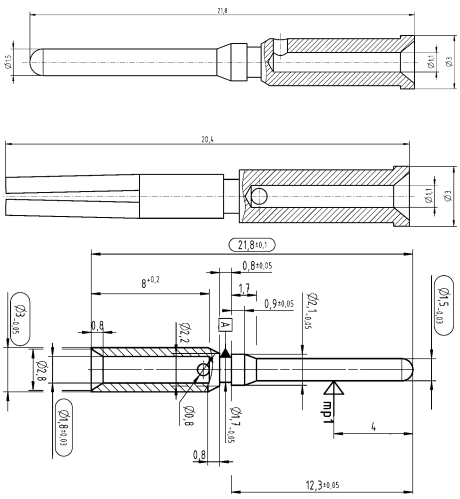

Number of contacts

3+ ⏚

Crimp termination
Shielded

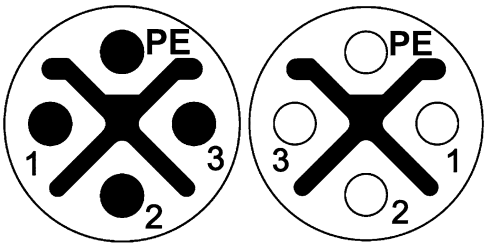

Technical characteristics

Number of contacts	3
Rated current	12 A
Rated voltage	630 V
Rated impulse voltage	6 kV
Pollution degree	3
Insulation resistance	>10^8 Ω
Contact resistance	≤10 mΩ
Mating cycles	≥500
Locking type	PushPull
Degree of protection acc. to IEC 60529	IP65 / IP67, when mated
Conductor cross-section	2.5 mm², 1.5 mm², 0.75 mm², 0.5 mm²

Technical characteristics

Conductor cross-section	AWG 14, AWG 16, AWG 19, AWG 21
Cable diameter	5.8 ... 13.5 mm
Tightening torque	0.6 Nm
Material (insert)	Polyamide (PA)
Material (hood/housing)	Zinc die-cast
Material (contacts)	Copper alloy
Surface (contacts)	Gold plated

Specifications and approvals

IEC 61076-2-111

Identification	Conductor cross-section (mm²)	Part number Male	Part number Female	Drawing (dimensions in mm)
Circular connectors M12, Power, PushPull, Cable connector, Straight, Crimp termination, Shielded, PushPull locking Please order crimp contacts separately.		21 03 896 1425	21 03 896 2425	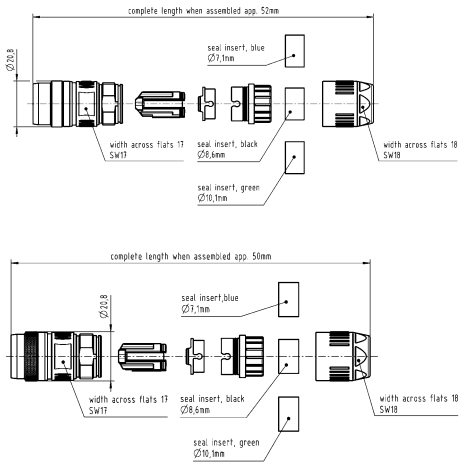
Circular connectors M12, Power, Crimp contact, Turned contacts, Pack contents: 50 pieces	0.5 0.75 1.5 2.5	21 01 100 9962 21 01 100 9963 21 01 100 9937 21 01 100 9938	21 01 100 9964 21 01 100 9965 21 01 100 9939 21 01 100 9940	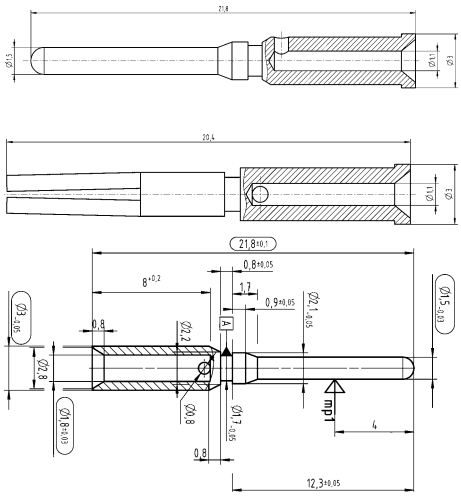

Number of contacts

4+ ⏚

Crimp termination
Shielded

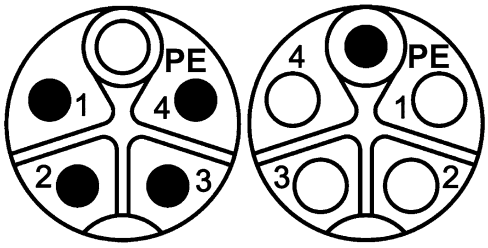

Technical characteristics

Number of contacts	4
Rated current	12 A
Rated voltage	630 V
Rated impulse voltage	6 kV
Pollution degree	3
Insulation resistance	>10^8 Ω
Contact resistance	≤10 mΩ
Mating cycles	≥500
Locking type	Screw locking
Degree of protection acc. to IEC 60529	IP65 / IP67, when mated
Conductor cross-section	0.5 ... 2.5 mm², 2.5 mm², 1.5 mm², 0.75 mm², 0.5 mm²

Technical characteristics

Conductor cross-section	AWG 20 ... AWG 14, AWG 14, AWG 16, AWG 19, AWG 21
Cable diameter	5.8 ... 13.5 mm
Tightening torque	0.6 Nm
Material (insert)	Polyamide (PA)
Material (hood/housing)	Zinc die-cast
Material (contacts)	Copper alloy
Surface (contacts)	Gold plated

Specifications and approvals

IEC 61076-2-111

Identification	Conductor cross-section (mm²)	Part number Male	Part number Female	Drawing (dimensions in mm)
Circular connectors M12, Power, Cable connector, Straight, Crimp termination, Shielded, Screw locking  Please order crimp contacts separately.	0.5 ... 2.5	21 03 896 1515	21 03 896 2515	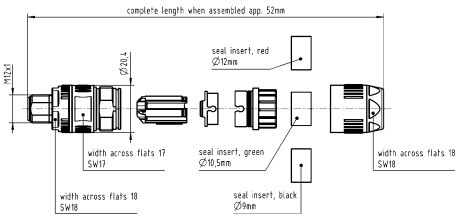
Circular connectors M12, Power, Crimp contact, Turned contacts, Pack contents: 50 pieces	0.5 0.75 1.5 2.5	21 01 100 9962 21 01 100 9963 21 01 100 9937 21 01 100 9938	21 01 100 9964 21 01 100 9965 21 01 100 9939 21 01 100 9940	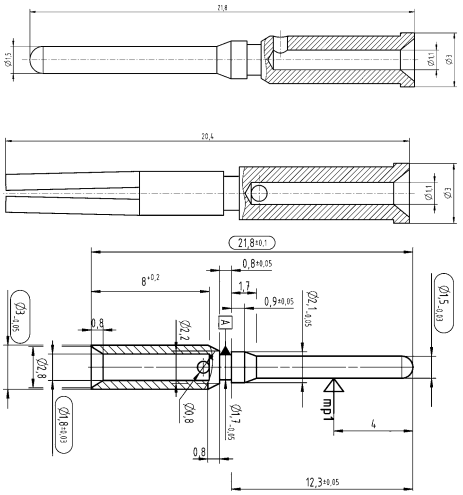

Number of contacts

4

HARAX® connection technology
Shielded

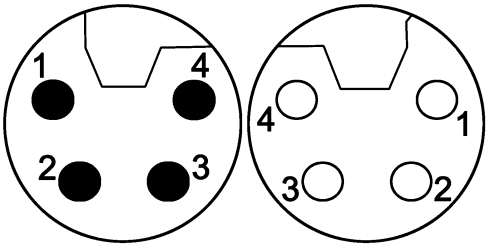

Technical characteristics

Number of contacts	4
Rated current	12 A
Rated voltage	63 V
Rated impulse voltage	1.5 kV
Pollution degree	3
Insulation resistance	>10^8 Ω
Contact resistance	≤10 mΩ
Mating cycles	≥100
Locking type	Screw locking
Degree of protection acc. to IEC 60529	IP65 / IP67, when mated
Conductor cross-section	0.75 ... 1.5 mm²
Conductor cross-section	AWG 18 ... AWG 16
Cable diameter	5.8 ... 13.5 mm
Tightening torque	0.6 Nm

Technical characteristics

Material (insert)	Polyamide (PA)
Colour (insert)	Black
Material (hood/housing)	Zinc die-cast
Material (contacts)	Copper alloy
Surface (contacts)	Gold plated
RoHS	compliant

Specifications and approvals

IEC 61076-2-111

Identification	Conductor cross-section (mm²)	Part number Male	Part number Female	Drawing (dimensions in mm)
Circular connectors M12, Power, Cable connector, Straight, *HARAX*® connection technology, Shielded 	0.75 ... 1.5	21 03 296 1506	21 03 296 2506	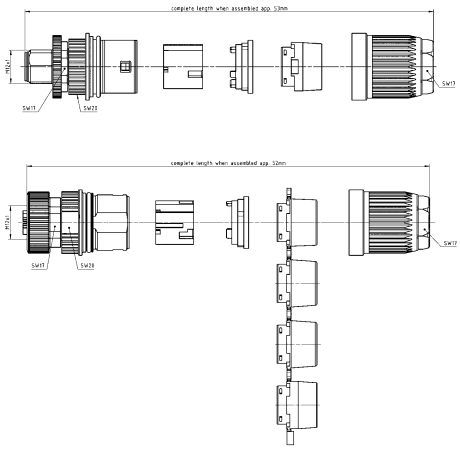

Number of contacts

4

Crimp termination
Shielded

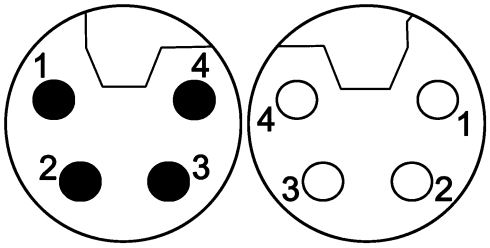

Technical characteristics

Number of contacts	4
Rated current	16 A
Rated voltage	63 V
Rated impulse voltage	1.5 kV
Pollution degree	3
Insulation resistance	>10^8 Ω
Contact resistance	≤10 mΩ
Mating cycles	≥500
Locking type	Screw locking
Degree of protection acc. to IEC 60529	IP65 / IP67, when mated
Conductor cross-section	2.5 mm², 1.5 mm², 0.75 mm², 0.5 mm²
Conductor cross-section	AWG 14, AWG 16, AWG 19, AWG 21

Technical characteristics

Cable diameter	5.8 ... 13.5 mm
Tightening torque	0.6 Nm
Material (insert)	Polyamide (PA)
Material (hood/housing)	Zinc die-cast
Material (contacts)	Copper alloy
Surface (contacts)	Gold plated

Specifications and approvals

IEC 61076-2-111

Identification	Conductor cross-section (mm²)	Part number Male	Part number Female	Drawing (dimensions in mm)
Circular connectors M12, Power, Cable connector, Straight, Crimp termination, Shielded, Screw locking Please order crimp contacts separately.		21 03 896 1410	21 03 896 2410	
Circular connectors M12, Power, Crimp contact, Turned contacts, Pack contents: 50 pieces	0.5 0.75 1.5 2.5	21 01 100 9962 21 01 100 9963 21 01 100 9937 21 01 100 9938	21 01 100 9964 21 01 100 9965 21 01 100 9939 21 01 100 9940	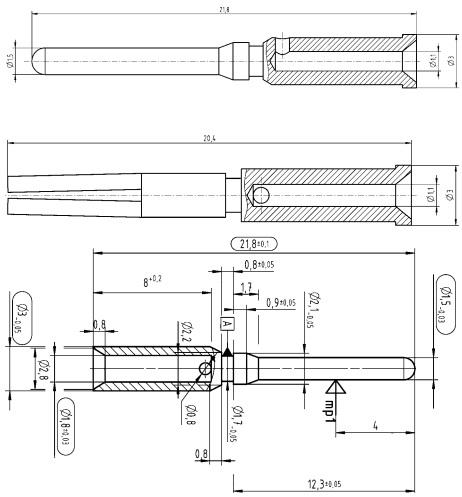

Number of contacts

4+

HARAX® connection technology
Shielded

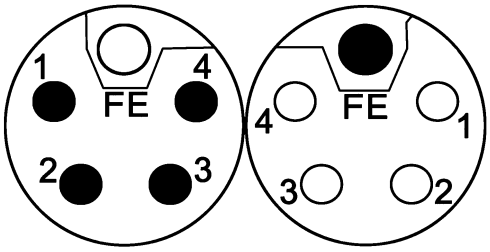

Technical characteristics

Number of contacts	4
Rated current	12 A
Rated voltage	63 V
Rated impulse voltage	1.5 kV
Pollution degree	3
Insulation resistance	>10^8 Ω
Contact resistance	≤10 mΩ
Mating cycles	≥100
Locking type	Screw locking
Degree of protection acc. to IEC 60529	IP65 / IP67, when mated
Conductor cross-section	0.75 ... 1.5 mm²
Conductor cross-section	AWG 18 ... AWG 16
Cable diameter	5.8 ... 13.5 mm
Tightening torque	0.6 Nm

Technical characteristics

Material (insert)	Polyamide (PA)
Colour (insert)	Grey
Material (hood/housing)	Zinc die-cast
Material (contacts)	Copper alloy
Surface (contacts)	Gold plated
RoHS	compliant

Specifications and approvals

IEC 61076-2-111

Identification	Conductor cross-section (mm²)	Part number Male	Part number Female	Drawing (dimensions in mm)
Circular connectors M12, Power, Cable connector, Straight, *HARAX*® connection technology, Shielded 	0.75 ... 1.5	21 03 296 1505	21 03 296 2505	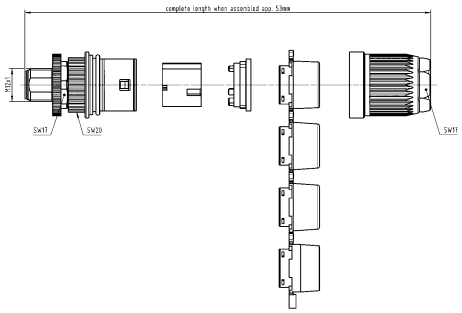 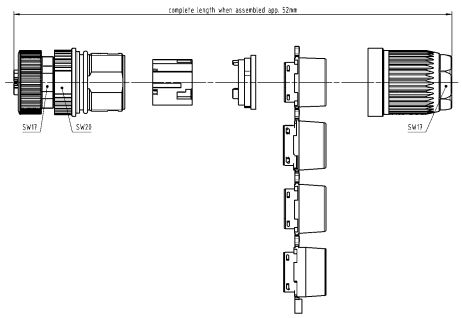

Number of contacts

4+

Crimp termination
Shielded

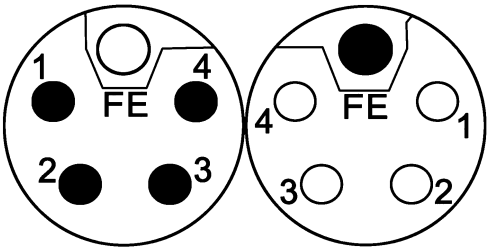

Technical characteristics

Number of contacts	4
Rated current	16 A
Rated voltage	63 V
Rated impulse voltage	1.5 kV
Pollution degree	3
Insulation resistance	>10^8 Ω
Contact resistance	≤10 mΩ
Mating cycles	≥500
Locking type	Screw locking
Degree of protection acc. to IEC 60529	IP65 / IP67, when mated
Conductor cross-section	0.5 ... 2.5 mm², 2.5 mm², 1.5 mm², 0.75 mm², 0.5 mm²
Conductor cross-section	AWG 20 ... AWG 14, AWG 14, AWG 16, AWG 20, AWG 21
Cable diameter	5.8 ... 13.5 mm
Tightening torque	0.6 Nm

Technical characteristics

Material (insert)	Polyamide (PA)
Material (hood/housing)	Zinc die-cast
Material (contacts)	Copper alloy
Surface (contacts)	Gold plated
RoHS	compliant, compliant with exemption

Specifications and approvals

IEC 61076-2-111
UL 2238 CYJV2.E302521
CSA-C22.2 No. 182.3 CYJV8.E302521

Identification	Conductor cross-section (mm²)	Part number Male	Part number Female	Drawing (dimensions in mm)
Circular connectors M12, Power, Cable connector, Straight, Crimp termination, Shielded  Please order crimp contacts separately.	0.5 ... 2.5	21 03 896 1505	21 03 896 2505	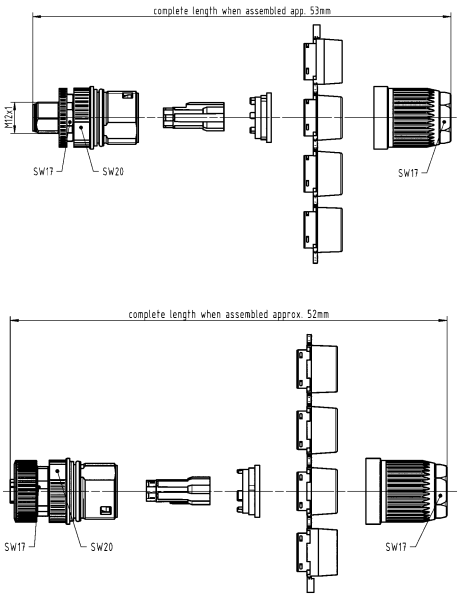
Circular connectors M12, Power, Crimp contact, 23.2 mm length, Turned contacts 	0.5 0.75 1.5 2.5	21 01 100 9923 21 01 100 9924 21 01 100 9925 21 01 100 9926	21 01 100 9931 21 01 100 9932 21 01 100 9933 21 01 100 9934	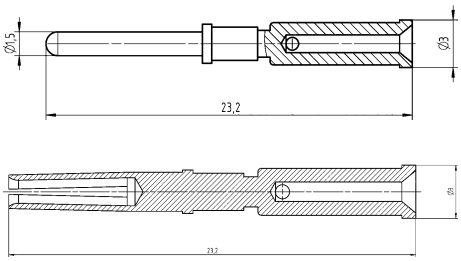

Identification	Conductor cross-section (mm²)	Part number Male	Part number Female	Drawing (dimensions in mm)
Circular connectors M12, Power, Crimp contact, FE contact, 24.8 mm length, Turned contacts  use with M12 Power female contacts	0.5 0.75 1.5 2.5	21 01 100 9927 21 01 100 9928 21 01 100 9929 21 01 100 9930		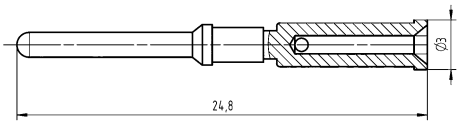

Number of contacts

4+

Crimp termination
Shielded

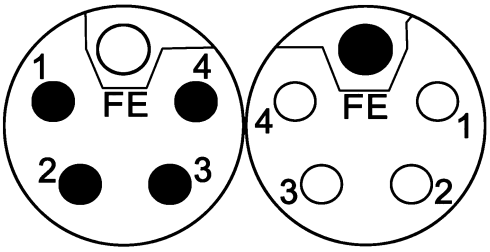

Technical characteristics

Number of contacts	4
Rated current	16 A
Rated voltage	63 V
Rated impulse voltage	1.5 kV
Pollution degree	3
Insulation resistance	>10^8 Ω
Contact resistance	≤10 mΩ
Mating cycles	≥500
Locking type	Screw locking
Degree of protection acc. to IEC 60529	IP65 / IP67, when mated
Conductor cross-section	2.5 mm², 1.5 mm², 0.75 mm², 0.5 mm²
Conductor cross-section	AWG 14, AWG 16, AWG 19, AWG 21

Technical characteristics

Cable diameter	5.8 ... 13.5 mm
Tightening torque	0.6 Nm
Material (insert)	Polyamide (PA)
Material (hood/housing)	Zinc die-cast
Material (contacts)	Copper alloy
Surface (contacts)	Gold plated

Specifications and approvals

IEC 61076-2-111

Identification	Conductor cross-section (mm²)	Part number Male	Part number Female	Drawing (dimensions in mm)
Circular connectors M12, Power, Cable connector, Straight, Crimp termination, Shielded, Screw locking Please order crimp contacts separately.		21 03 896 1510	21 03 896 2510	
Circular connectors M12, Power, Crimp contact, Turned contacts, Pack contents: 50 pieces	0.5 0.75 1.5 2.5	21 01 100 9962 21 01 100 9963 21 01 100 9937 21 01 100 9938	21 01 100 9964 21 01 100 9965 21 01 100 9939 21 01 100 9940	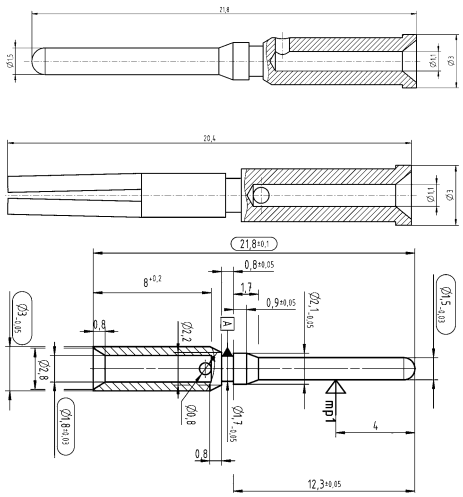

Number of contacts

3+ ⏚

Crimp termination
Shielded

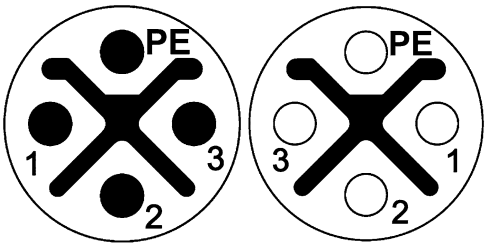

Technical characteristics

Number of contacts	3
Rated current	12 A
Rated voltage	630 V
Rated impulse voltage	6 kV
Pollution degree	3
Insulation resistance	>10^8 Ω
Contact resistance	≤10 mΩ
Mating cycles	≥500
Locking type	Screw locking
Degree of protection acc. to IEC 60529	IP65 / IP67, when mated
Conductor cross-section	2.5 mm², 1.5 mm², 0.75 mm², 0.5 mm²

Technical characteristics

Conductor cross-section	AWG 14, AWG 16, AWG 19, AWG 21
Cable diameter	5.8 ... 13.5 mm
Tightening torque	0.6 Nm
Material (insert)	Polyamide (PA)
Material (hood/housing)	Zinc die-cast
Material (contacts)	Copper alloy
Surface (contacts)	Gold plated

Specifications and approvals

IEC 61076-2-111

Identification	Conductor cross-section (mm²)	Part number Male	Part number Female	Drawing (dimensions in mm)
Circular connectors M12, Power, Cable connector, Straight, Crimp termination, Shielded, Screw locking  Please order crimp contacts separately.		21 03 896 1415	21 03 896 2415	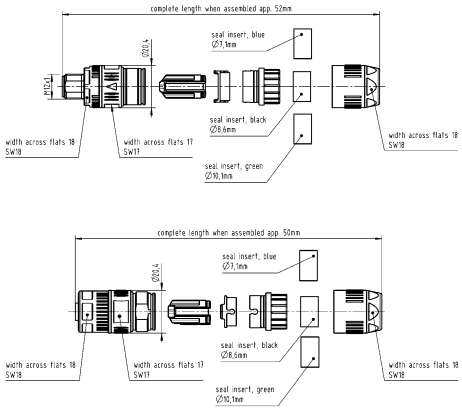
Circular connectors M12, Power, Crimp contact, Turned contacts, Pack contents: 50 pieces	0.5 0.75 1.5 2.5	21 01 100 9962 21 01 100 9963 21 01 100 9937 21 01 100 9938	21 01 100 9964 21 01 100 9965 21 01 100 9939 21 01 100 9940	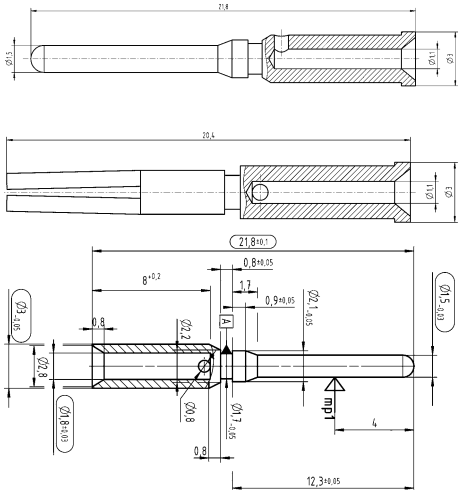

Technical characteristics

Mating cycles	≥100
Locking type	PushPull
RoHS	compliant, compliant with exemption

Specifications and approvals

Identification		Part number Male	Part number Female	Drawing (dimensions in mm)
Circular connectors M12, M12-male moving load, A-coding		21 03 030 1400		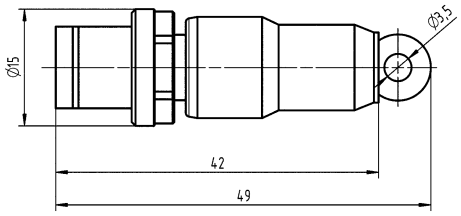
Circular connectors M12, Unshielded, T-splitter, A-coding		21 03 319 9501		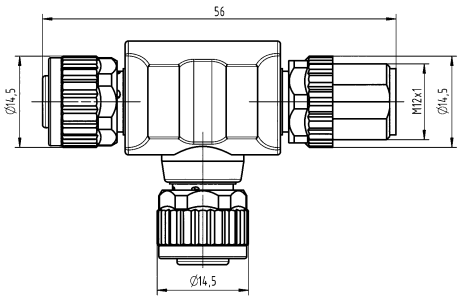
Circular connectors M12, Unshielded, Y-splitter, A-coding		21 03 321 9400		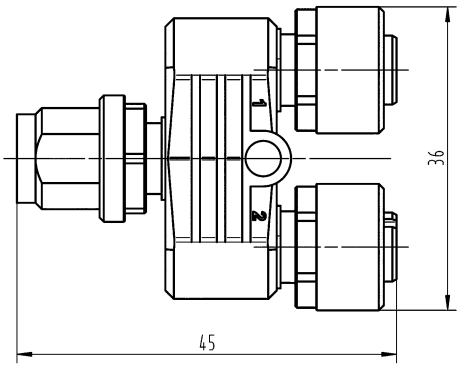

Identification	Part number Male	Part number Female	Drawing (dimensions in mm)
Circular connectors M12, M12-male moving load, B-coding 	21 03 030 1300		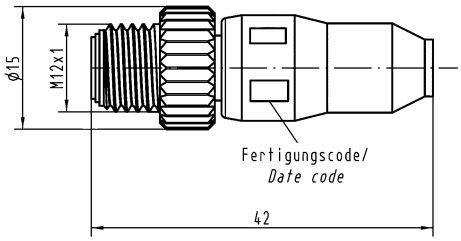
Circular connectors M12, M12-male/female panel feed through, B-coding 		21 03 330 1300	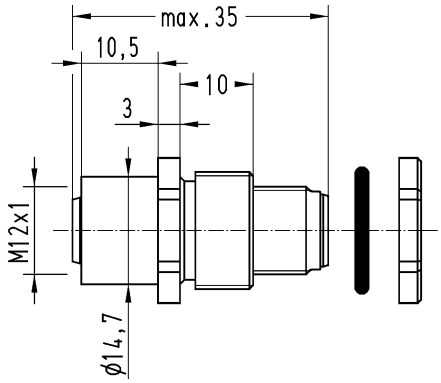
Circular connectors M12, M12 female-RJ45 panel feed through, D-coding, 4-pin, Straight 		21 03 381 2401	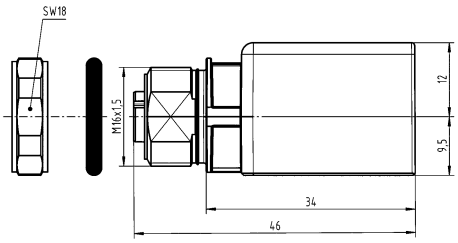
Circular connectors M12, M12 PushPull adapter, D-coding, 4-pin 		21 03 381 2403	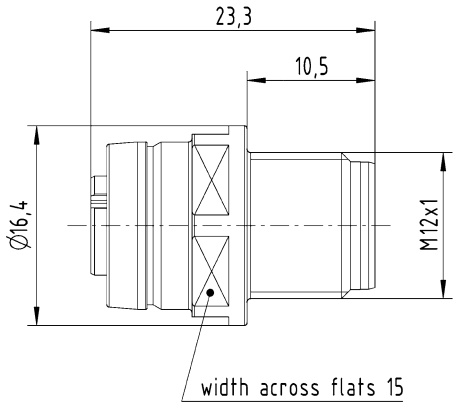

M12

Identification	Part number Male	Part number Female	Drawing (dimensions in mm)
Circular connectors M12, M12 female-RJ45 panel feed through, D-coding, 4-pin, Angled 		21 03 381 4401	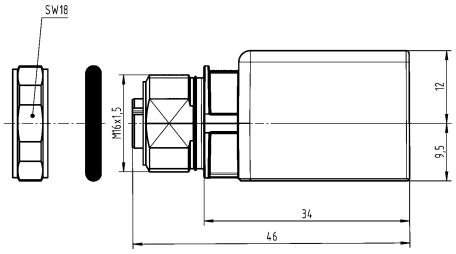
Circular connectors M12, *har*-speed M12 adapter M12-RJ45, X-coding, Straight, Cat. 6_A 		21 03 381 2800	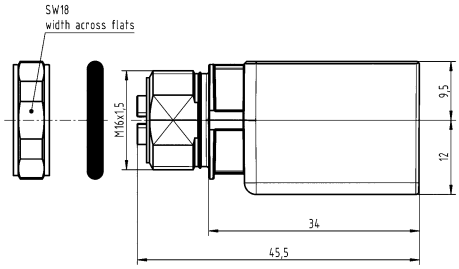
Circular connectors M12, *har*-speed M12 adapter M12-RJ45, X-coding, Angled, Cat. 6_A 		21 03 381 4800	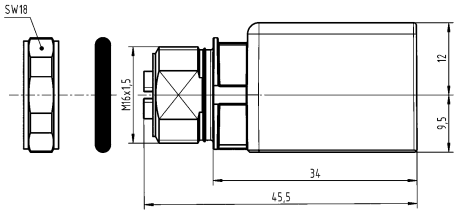

Technical characteristics

Locking type	PushPull, Screw locking
Material (accessories)	Thermoplastic
Colour (accessories)	Black
RoHS	compliant with exemption, compliant

Specifications and approvals

UL 2238 CYJV2.E302521
CSA-C22.2 No. 182.3 CYJV8.E302521

Identification		Part number Female	Drawing (dimensions in mm)
Circular connectors M12, Gender changer, D-coding, 4-pin, Cat. 5		21 03 381 6401	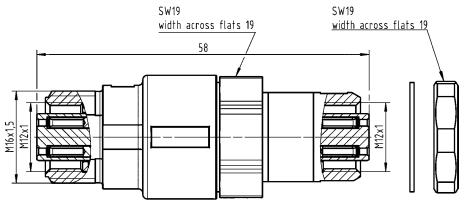
Circular connectors M12, Gender changer, D-coding, 4-pin or 8-pin		21 03 381 6402	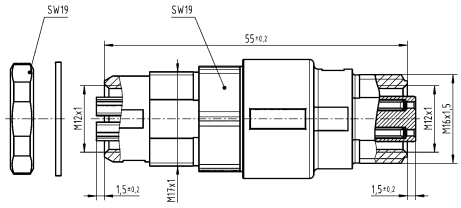
Circular connectors M12, Gender changer, D-coding, With PushPull, 4-pin, Cat. 5		21 03 381 6403	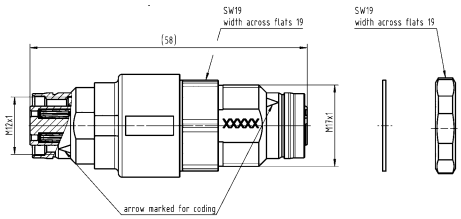
Circular connectors M12, Gender changer, D-coding / X-coding, With PushPull, 4-pin or 8-pin		21 03 381 6404	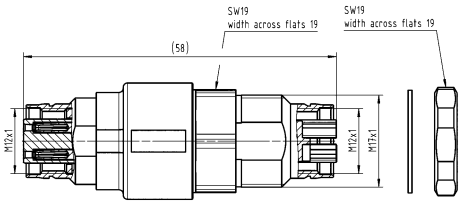

M12

Identification	Part number Female	Drawing (dimensions in mm)
Circular connectors M12, Gender changer, X-coding, Cat. 6_A 	21 03 381 6815	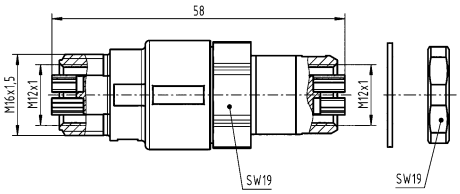
Circular connectors M12, Gender changer, X-coding, With PushPull, Cat. 6_A 	21 03 381 6816	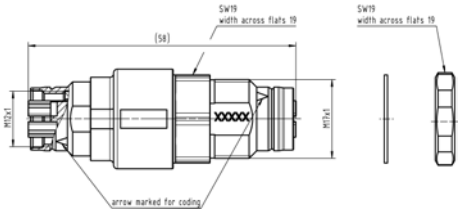
Circular connectors M12, Panel mounting parts 	21 01 000 0036	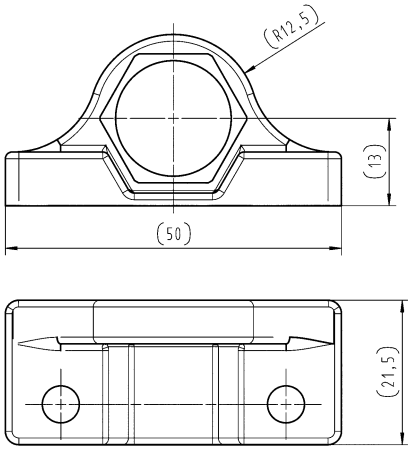

Technical characteristics

RoHS compliant with exemption

Identification	Part number	Drawing (dimensions in mm)
Circular connectors M12, Slim Design, Crimp flange set  HARTING offers to test and define the best crimp flange and ferrule combination for customer specific cables.	21 01 010 0017 21 01 010 0018 21 01 010 0019 21 01 010 0020 21 01 010 0021 21 01 010 0022 21 01 010 0024	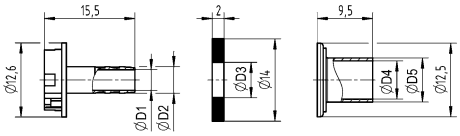

	D1	D2	D3	D4	D5
21 01 010 0017	3.5	4.5	6.0	6.5	7.5
21 01 010 0018	4.5	5.5	6.6	7.5	8.5
21 01 010 0019	4.5	5.5	6.8	8.0	9.0
21 01 010 0020	5.0	6.0	7.8	9.0	10.0
21 01 010 0021	6.5	7.5	8.0	10.0	10.8
21 01 010 0022	5.0	6.0	7.4	9.0	10.0
21 01 010 0024	5.5	6.5	8.8	10.0	10.8

Technical characteristics

Material (accessories)	Thermoplastic

Technical characteristics

Colour (accessories)	Black
RoHS	compliant

Identification	Cable diameter (mm)	Part number	Drawing (dimensions in mm)
Circular connectors M12, M12-S, Seal, Unshielded 	2.9 ... 4 4 ... 5.1	21 01 010 2011 21 01 010 2001	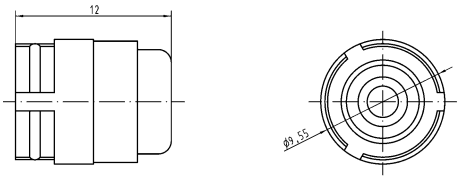
Circular connectors M12, M12-L, Seal, Unshielded 	4.7 ... 6 6 ... 8	21 01 010 2015 21 01 010 2007	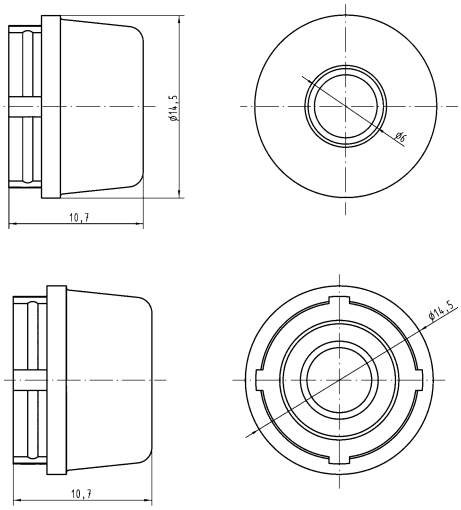
Circular connectors M12, M12-L, Set of seals, Shielded 	4.5 ... 8.8	21 01 010 2017	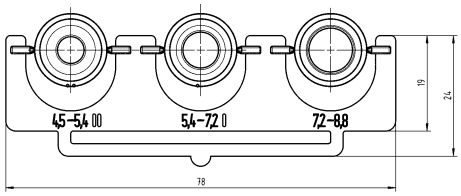

Identification	Cable diameter (mm)	Part number	Drawing (dimensions in mm)
Circular connectors M12, Slim Design, Set of seals, Shielded 	4.5 ... 8.8 5.7 ... 8.8	21 01 010 2038 21 01 010 2028	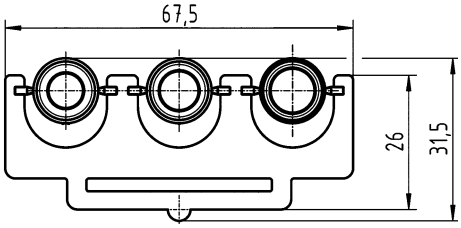

Technical characteristics

Degree of protection acc. to IEC 60529	IP65 / IP67, IP67

Technical characteristics

Material (accessories)	Thermoplastic
Colour (accessories)	Black
RoHS	compliant

Identification		Part number	Drawing (dimensions in mm)
Circular connectors M12, Cap, IP65 / IP67		21 01 000 0003	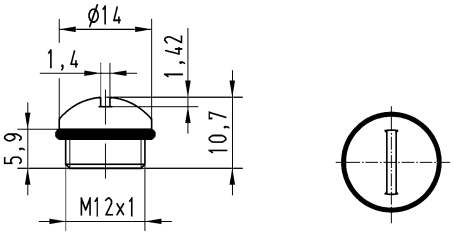
Circular connectors M12, Cap, for male inserts, with cord, IP67		21 41 000 0001	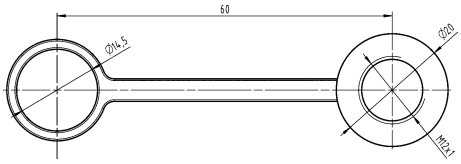
Circular connectors M12, Cap, for female inserts, with cord, IP67		21 41 000 0002	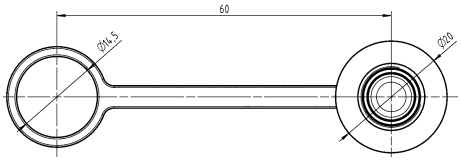

Technical characteristics

Degree of protection acc. to IEC 60529 IP65 / IP67

Technical characteristics

Material (accessories)	Metal
RoHS	compliant with exemption

Identification	Part number	Drawing (dimensions in mm)
Circular connectors M12, Cap, for female inserts, with cord 	21 01 000 0030	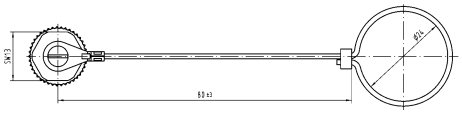
Circular connectors M12, Cap, for female inserts, with cable clip 	21 01 000 0031	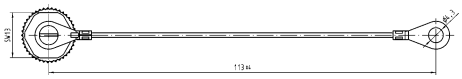
Circular connectors M12, Cap, for male inserts, with cord 	21 01 000 0033	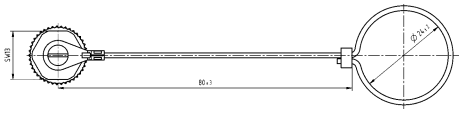
Circular connectors M12, Cap, for male inserts, with cable clip 	21 01 000 0038	

Contents | Page

Number of contacts

6

Crimp termination

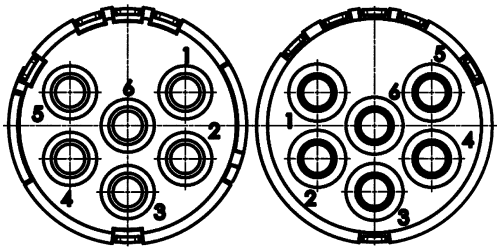

Technical characteristics

Number of contacts	6
Rated current	20 A
Rated voltage	300 V
Rated impulse voltage	2.5 kV
Pollution degree	3
Insulation resistance	>10^{10} Ω
Limiting temperature	-40 ... +125 °C
Mating cycles	≥500
Conductor cross-section	0.75 ... 2.5 mm²
Material (insert)	Polyamide (PA)

Technical characteristics

Colour (insert)	White
Material flammability class acc. to UL 94	V-0
RoHS	compliant

Specifications and approvals

UL 1977 ECBT2.E235076

Identification	Conductor cross-section (mm²)	Part number Male	Part number Female	Drawing (dimensions in mm)
Circular connectors M23, Signal, Inserts, Crimp termination  Please order crimp contacts separately. 6x 2 mm	0.75 ... 2.5	09 15 106 3001	09 15 106 3101	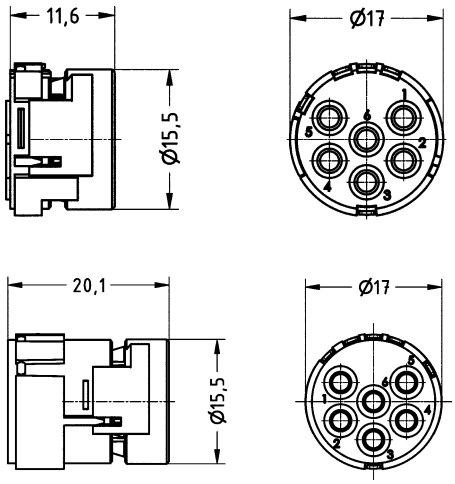

Number of contacts

6

Solder termination

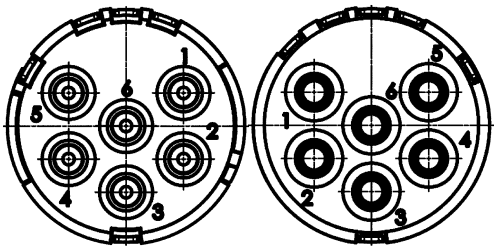

Technical characteristics

Number of contacts	6
Rated current	20 A
Rated voltage	300 V
Rated impulse voltage	2.5 kV
Pollution degree	3
Insulation resistance	>10^{10} Ω
Limiting temperature	-40 ... +125 °C
Mating cycles	≥500
Conductor cross-section	2.5 mm² max.
Material (insert)	Polyamide (PA)
Colour (insert)	White

Technical characteristics

Material (contacts)	Copper alloy
Surface (contacts)	Gold plated
Material flammability class acc. to UL 94	V-0
RoHS	compliant with exemption

Specifications and approvals

UL 1977 ECBT2.E235076

Identification	Conductor cross-section (mm²)	Part number Male	Part number Female	Drawing (dimensions in mm)
Circular connectors M23, Signal, Inserts, Solder termination 	2.5 max.	09 15 106 2602	09 15 106 2702	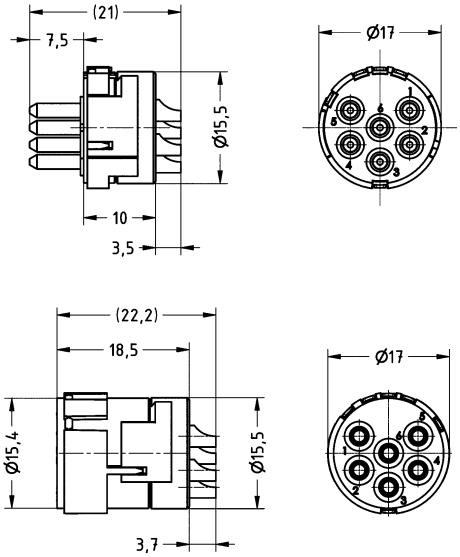

Number of contacts

7

Crimp termination

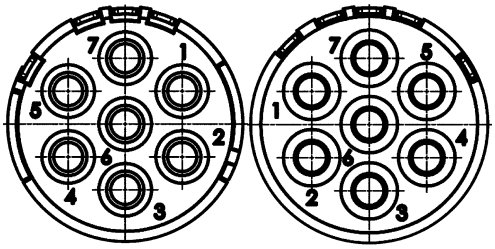

Technical characteristics

Number of contacts	7
Rated current	20 A
Rated voltage	300 V
Rated impulse voltage	2.5 kV
Pollution degree	3
Insulation resistance	>10^{10} Ω
Limiting temperature	-40 ... +125 °C
Mating cycles	≥500
Conductor cross-section	0.75 ... 2.5 mm²
Material (insert)	Polyamide (PA)

Technical characteristics

Colour (insert)	White
Material flammability class acc. to UL 94	V-0
RoHS	compliant with exemption

Specifications and approvals

UL 1977 ECBT2.E235076

Identification	Conductor cross-section (mm²)	Part number Male	Part number Female	Drawing (dimensions in mm)
Circular connectors M23, Signal, Inserts, Crimp termination  Please order crimp contacts separately. 7x 2 mm	0.75 ... 2.5	09 15 107 3001	09 15 107 3101	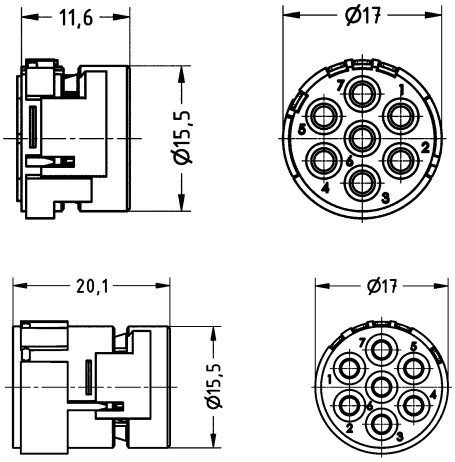

Number of contacts

7

Solder termination

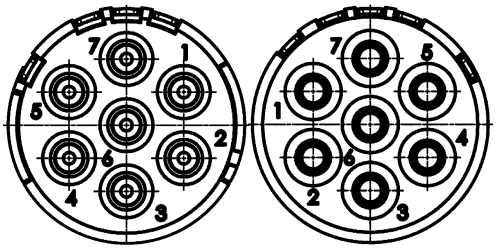

Technical characteristics

Number of contacts	7
Rated current	20 A
Rated voltage	300 V
Rated impulse voltage	2.5 kV
Pollution degree	3
Insulation resistance	>10^{10} Ω
Limiting temperature	-40 ... +125 °C
Mating cycles	≥500
Conductor cross-section	2.5 mm² max.
Material (insert)	Polyamide (PA)
Colour (insert)	White

Technical characteristics

Material (contacts)	Copper alloy
Surface (contacts)	Gold plated
Material flammability class acc. to UL 94	V-0
RoHS	compliant with exemption

Specifications and approvals

UL 1977 ECBT2.E235076

Identification	Conductor cross-section (mm²)	Part number Male	Part number Female	Drawing (dimensions in mm)
Circular connectors M23, Signal, Inserts, Solder termination 	2.5 max.	09 15 107 2602	09 15 107 2702	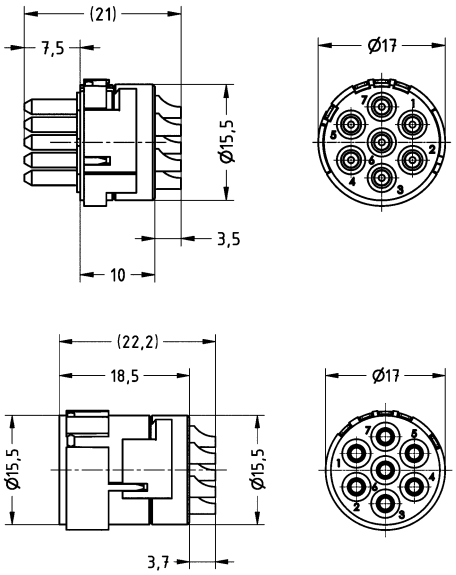

Number of contacts

8

+ 1 additional special contact
Crimp termination

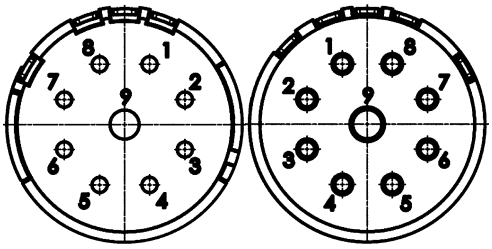

Technical characteristics

Number of contacts	8
Additional contacts	+ 1 additional special contact
Rated current	8 A
Rated voltage	200 V
Rated impulse voltage	2.5 kV
Pollution degree	3
Rated current (special contact)	20 A
Rated voltage (special contact)	200 V
Rated impulse voltage (special contact)	2.5 kV
Pollution degree (special contact)	3
Insulation resistance	$>10^{10}$ Ω

Technical characteristics

Limiting temperature	-40 ... +125 °C
Mating cycles	≥500
Conductor cross-section	0.08 ... 1.5 mm²
Material (insert)	Polyamide (PA)
Colour (insert)	White
Material flammability class acc. to UL 94	V-0
RoHS	compliant with exemption

Specifications and approvals

UL 1977 ECBT2.E235076

Identification	Conductor cross-section (mm²)	Part number Male	Part number Female	Drawing (dimensions in mm)
Circular connectors M23, Signal, Inserts, Crimp termination  Please order crimp contacts separately. 8x 1 mm 1x 2 mm	0.08 ... 1.5	09 15 109 3001	09 15 109 3101	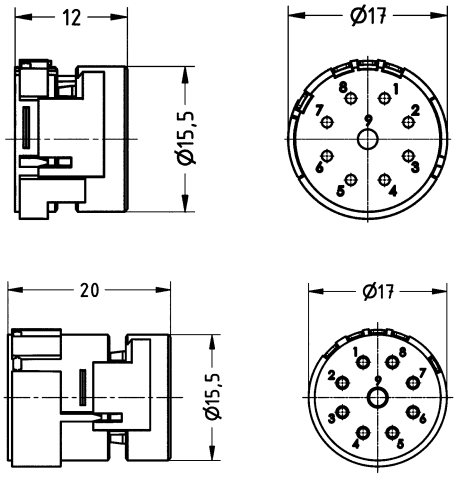

Number of contacts

8

+ 1 additional special contact
Solder termination

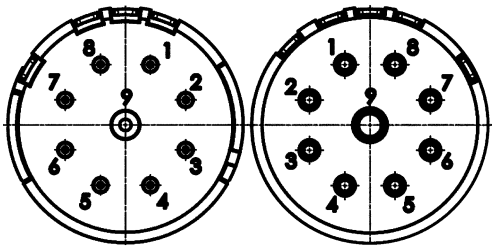

Technical characteristics

Number of contacts	8
Additional contacts	+ 1 additional special contact
Rated current	8 A
Rated voltage	200 V
Rated impulse voltage	2.5 kV
Pollution degree	3
Rated current (special contact)	20 A
Rated voltage (special contact)	200 V
Rated impulse voltage (special contact)	2.5 kV
Pollution degree (special contact)	3
Insulation resistance	$>10^{10}$ Ω
Limiting temperature	-40 ... +125 °C

Technical characteristics

Mating cycles	≥500
Conductor cross-section	1 mm² max.
Material (insert)	Polyamide (PA)
Colour (insert)	White
Material (contacts)	Copper alloy
Surface (contacts)	Gold plated
Material flammability class acc. to UL 94	V-0
RoHS	compliant with exemption

Specifications and approvals

UL 1977 ECBT2.E235076

Identification	Conductor cross-section (mm²)	Part number Male	Part number Female	Drawing (dimensions in mm)
Circular connectors M23, Signal, Inserts, Solder termination 	1 max.	09 15 109 2602	09 15 109 2702	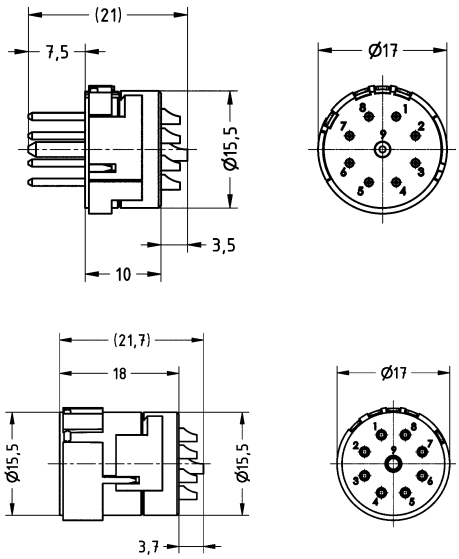

Number of contacts

11+ ⏚

Crimp termination

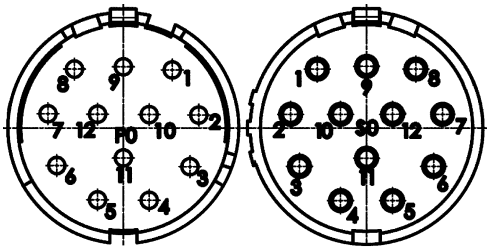

Technical characteristics

Number of contacts	11
Rated current	8 A
Rated voltage	200 V
Rated impulse voltage	2.5 kV
Pollution degree	3
Insulation resistance	>10^{10} Ω
Limiting temperature	-40 ... +125 °C
Mating cycles	≥500
Conductor cross-section	0.08 ... 1.5 mm²
Material (insert)	Polyamide (PA)

Technical characteristics

Colour (insert)	Grey
Material flammability class acc. to UL 94	V-0
RoHS	compliant with exemption

Specifications and approvals

UL 1977 ECBT2.E235076

Identification	Conductor cross-section (mm²)	Part number Male	Part number Female	Drawing (dimensions in mm)
Circular connectors M23, Signal, Inserts, Crimp termination 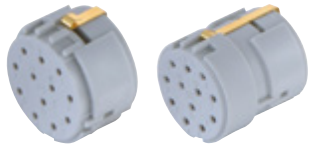 Please order crimp contacts separately. 12x 1 mm	0.08 ... 1.5	09 15 112 3021	09 15 112 3121	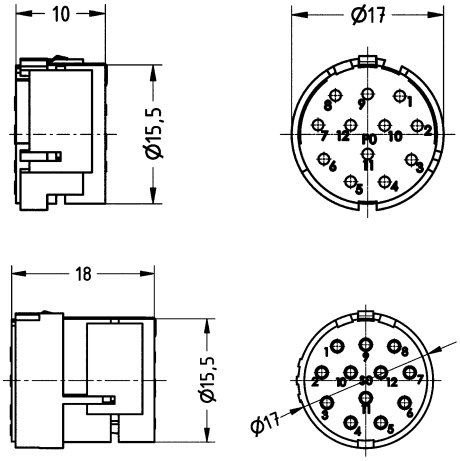

Number of contacts

11+

Solder termination

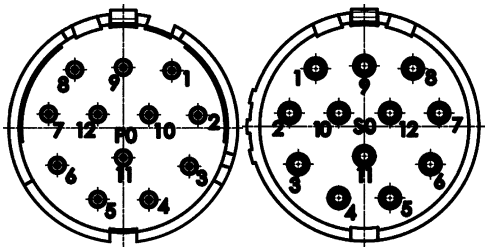

Technical characteristics

Number of contacts	11
Rated current	8 A
Rated voltage	200 V
Rated impulse voltage	2.5 kV
Pollution degree	3
Insulation resistance	>10^{10} Ω
Limiting temperature	-40 ... +125 °C
Mating cycles	≥500
Conductor cross-section	1 mm² max.
Material (insert)	Polyamide (PA)
Colour (insert)	Grey

Technical characteristics

Material (contacts)	Copper alloy
Surface (contacts)	Gold plated
Material flammability class acc. to UL 94	V-0
RoHS	compliant with exemption

Specifications and approvals

UL 1977 ECBT2.E235076

Identification	Conductor cross-section (mm²)	Part number Male	Part number Female	Drawing (dimensions in mm)
Circular connectors M23, Signal, Inserts, Solder termination 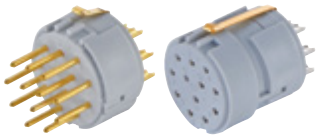	1 max.	09 15 112 2622	09 15 112 2722	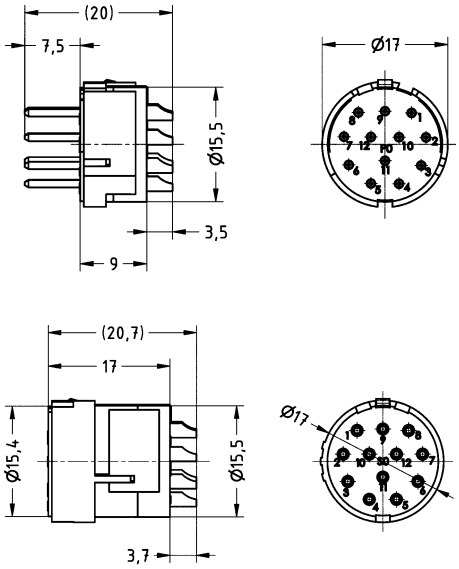

Number of contacts

12

Crimp termination

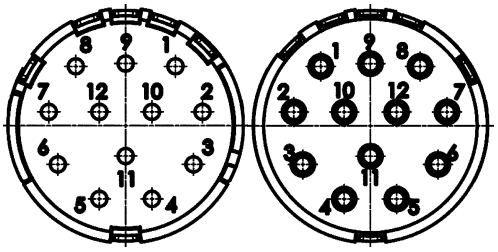

Technical characteristics

Number of contacts	12
Rated current	8 A
Rated voltage	200 V
Rated impulse voltage	2.5 kV
Pollution degree	3
Insulation resistance	>10^{10} Ω
Limiting temperature	-40 ... +125 °C
Mating cycles	≥500
Conductor cross-section	0.08 ... 1.5 mm²
Material (insert)	Polyamide (PA)

Technical characteristics

Colour (insert)	White
Material flammability class acc. to UL 94	V-0
RoHS	compliant with exemption, compliant

Specifications and approvals

UL 1977 ECBT2.E235076

Identification	Conductor cross-section (mm²)	Part number Male	Part number Female	Drawing (dimensions in mm)
Circular connectors M23, Signal, Inserts, Crimp termination  Please order crimp contacts separately. 12x 1 mm	0.08 ... 1.5	09 15 112 3001	09 15 112 3101	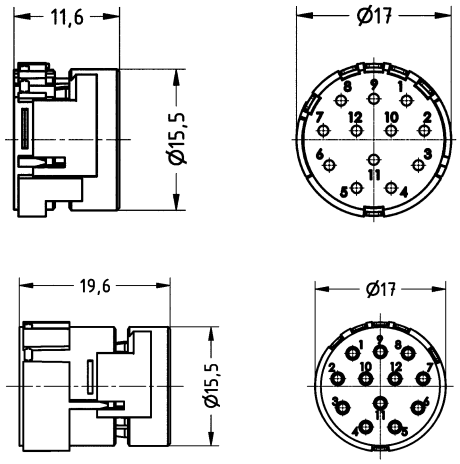
Circular connectors M23, Signal, Inserts, Marking in opposite direction, Crimp termination Please order crimp contacts separately. 12x 1 mm	0.08 ... 1.5	09 15 112 3011	09 15 112 3111	

Number of contacts

12

Solder termination

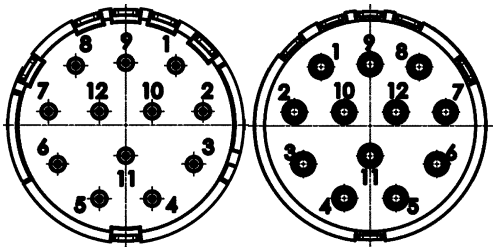

Technical characteristics

Number of contacts	12
Rated current	8 A
Rated voltage	200 V
Rated impulse voltage	2.5 kV
Pollution degree	3
Insulation resistance	>10^{10} Ω
Limiting temperature	-40 ... +125 °C
Mating cycles	≥500
Conductor cross-section	1 mm² max.
Material (insert)	Polyamide (PA)
Colour (insert)	White

Technical characteristics

Material (contacts)	Copper alloy
Surface (contacts)	Gold plated
Material flammability class acc. to UL 94	V-0
RoHS	compliant with exemption, compliant

Specifications and approvals

UL 1977 ECBT2.E235076

Identification	Conductor cross-section (mm²)	Part number Male	Part number Female	Drawing (dimensions in mm)
Circular connectors M23, Signal, Inserts, Solder termination 	1 max.	09 15 112 2602	09 15 112 2702	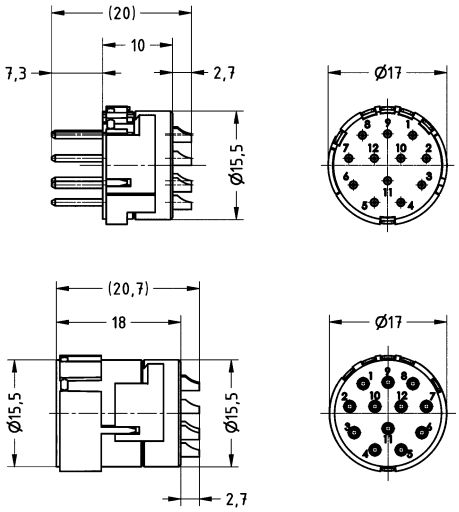
Circular connectors M23, Signal, Inserts, Marking in opposite direction, Solder termination	1 max.	09 15 112 2612	09 15 112 2712	

Number of contacts

17

Crimp termination

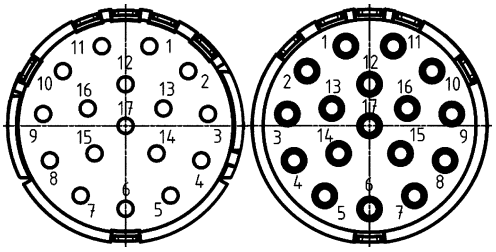

Technical characteristics

Number of contacts	17
Rated current	8 A
Rated voltage	160 V
Rated impulse voltage	1.5 kV
Pollution degree	3
Insulation resistance	>10^6 Ω
Limiting temperature	-40 ... +125 °C
Mating cycles	≥500
Conductor cross-section	0.08 ... 1.5 mm²
Material (insert)	Polyamide (PA)

Technical characteristics

Colour (insert)	White
Material flammability class acc. to UL 94	V-0
RoHS	compliant with exemption

Specifications and approvals

UL 1977 ECBT2.E235076

Identification	Conductor cross-section (mm²)	Part number Male	Part number Female	Drawing (dimensions in mm)
Circular connectors M23, Signal, Inserts, Crimp termination  Please order crimp contacts separately. 17x 1 mm	0.08 ... 1.5	09 15 117 3001	09 15 117 3101	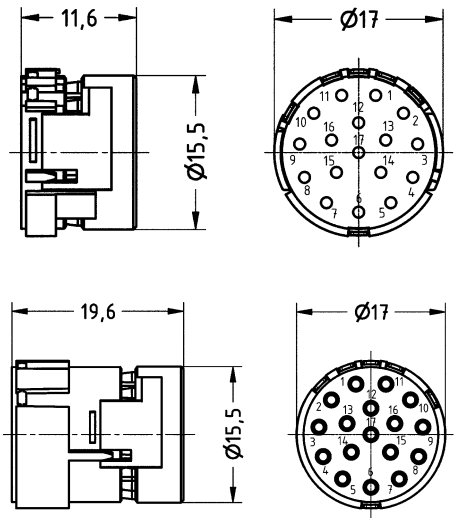

Number of contacts

17

Solder termination

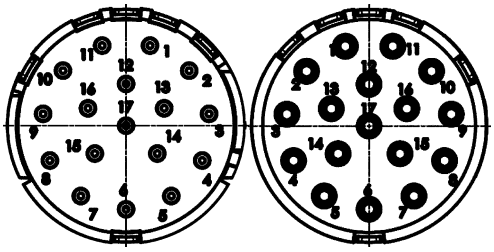

Technical characteristics

Number of contacts	17
Rated current	8 A
Rated voltage	160 V
Rated impulse voltage	1.5 kV
Pollution degree	3
Insulation resistance	>10^6 Ω
Limiting temperature	-40 ... +125 °C
Mating cycles	≥500
Conductor cross-section	1 mm² max.
Material (insert)	Polyamide (PA)
Colour (insert)	White

Technical characteristics

Material (contacts)	Copper alloy
Surface (contacts)	Gold plated
Material flammability class acc. to UL 94	V-0
RoHS	compliant with exemption

Specifications and approvals

UL 1977 ECBT2.E235076

Identification	Conductor cross-section (mm²)	Part number Male	Part number Female	Drawing (dimensions in mm)
Circular connectors M23, Signal, Inserts, Solder termination 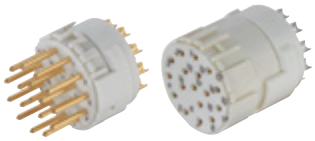	1 max.	09 15 117 2602	09 15 117 2702	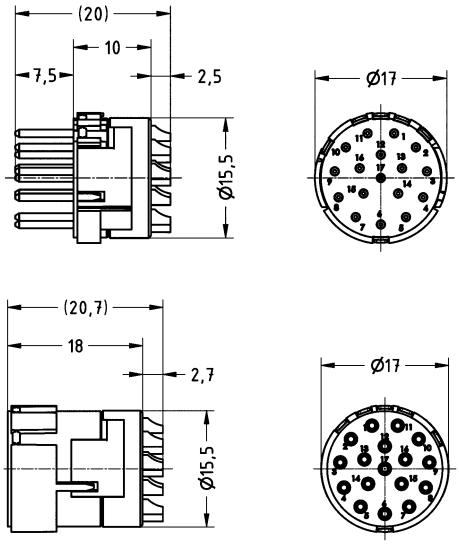

Number of contacts

16

+ 3 additional special contacts
Crimp termination

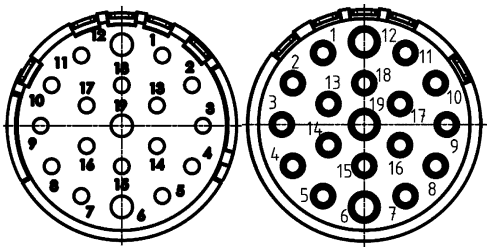

Technical characteristics

Number of contacts	16
Additional contacts	+ 3 additional special contacts
Rated current	8 A
Rated voltage	100 V
Rated impulse voltage	1.5 kV
Pollution degree	3
Rated current (special contact)	10 A
Rated voltage (special contact)	100 V
Rated impulse voltage (special contact)	1.5 kV
Pollution degree (special contact)	3
Insulation resistance	>10^6 Ω

Technical characteristics

Limiting temperature	-40 ... +125 °C
Mating cycles	≥500
Conductor cross-section	0.08 ... 1.5 mm²
Material (insert)	Polyamide (PA)
Colour (insert)	White
Material flammability class acc. to UL 94	V-0
RoHS	compliant with exemption

Specifications and approvals

UL 1977 ECBT2.E235076

Identification	Conductor cross-section (mm²)	Part number Male	Part number Female	Drawing (dimensions in mm)
Circular connectors M23, Signal, Inserts, Crimp termination  Please order crimp contacts separately. 16x 1 mm 3x 1.5 mm	0.08 ... 1.5	09 15 119 3001	09 15 119 3101	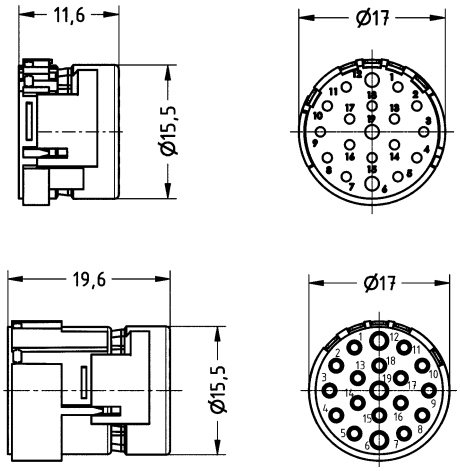

Number of contacts

16

+ 3 additional special contacts
Solder termination

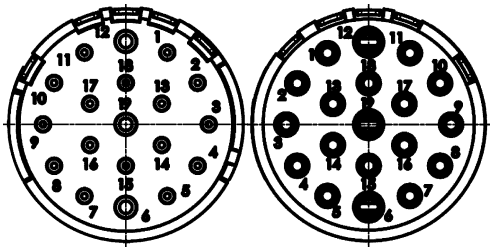

Technical characteristics

Number of contacts	16
Additional contacts	+ 3 additional special contacts
Rated current	8 A
Rated voltage	100 V
Rated impulse voltage	1.5 kV
Pollution degree	3
Rated current (special contact)	10 A
Rated voltage (special contact)	100 V
Rated impulse voltage (special contact)	1.5 kV
Pollution degree (special contact)	3
Insulation resistance	>10^6 Ω
Limiting temperature	-40 ... +125 °C

Technical characteristics

Mating cycles	≥500
Conductor cross-section	1 mm² max.
Material (insert)	Polyamide (PA)
Colour (insert)	White
Material (contacts)	Copper alloy
Surface (contacts)	Gold plated
Material flammability class acc. to UL 94	V-0
RoHS	compliant with exemption

Specifications and approvals

UL 1977 ECBT2.E235076

Identification	Conductor cross-section (mm²)	Part number Male	Part number Female	Drawing (dimensions in mm)
Circular connectors M23, Signal, Inserts, Solder termination 	1 max.	09 15 119 2602	09 15 119 2702	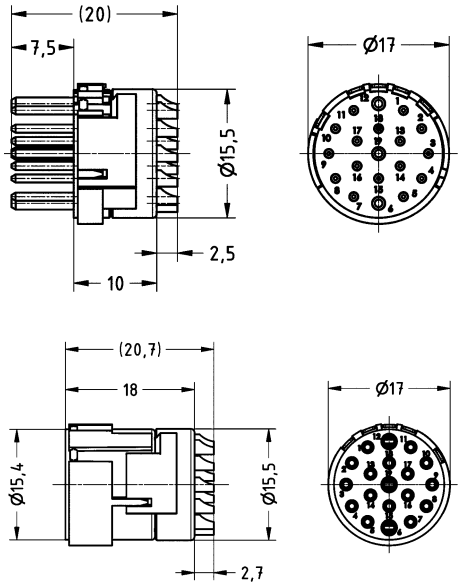

Technical characteristics

Contact resistance	≤3 mΩ
Conductor cross-section	0.08 ... 0.56 mm², 0.14 ... 1 mm², 0.75 ... 1.5 mm², 0.75 ... 2.5 mm², 0.34 ... 1 mm², 0.14 ... 0.56 mm², 0.56 ... 1 mm²
Conductor cross-section	AWG 28 ... AWG 20, AWG 26 ... AWG 17, AWG 19 ... AWG 16, AWG 19 ... AWG 14, AWG 22 ... AWG 17, AWG 26 ... AWG 20, AWG 20 ... AWG 17

Technical characteristics

Material (contacts)	Copper alloy
Surface (contacts)	Gold plated
RoHS	compliant with exemption

Specifications and approvals

EN 60664-1
IEC 61984

Identification	Conductor cross-section (mm²)	Part number Male	Part number Female	Drawing (dimensions in mm)
Circular connectors M23, Signal, Crimp contact, 1 mm, Turned contacts 	0.08 ... 0.56 0.14 ... 1 0.34 ... 1 0.75 ... 1.5	09 15 100 6101 09 15 100 6102 09 15 100 6103	09 15 100 6201 09 15 100 6202 09 15 100 6203	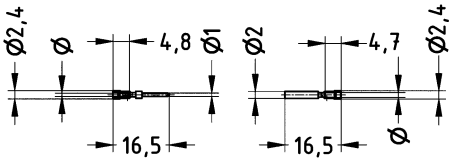 Stripping length 4 mm
Circular connectors M23, Signal, Crimp contact, 2 mm, Turned contacts 	0.75 ... 2.5	09 15 100 6121	09 15 100 6221	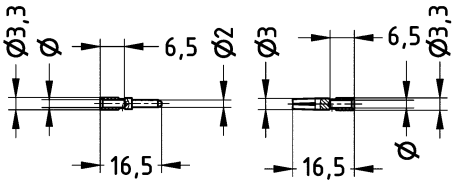 Stripping length 4 mm
Circular connectors M23, Signal, Crimp contact, 1.5 mm, Turned contacts 	0.14 ... 0.56 0.14 ... 1 0.56 ... 1	09 15 100 6111	09 15 100 6211 09 15 100 6212	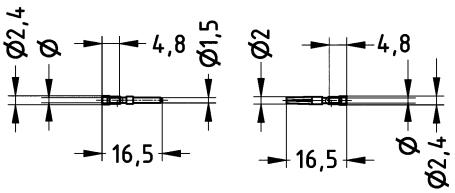 Stripping length 4 mm

Features

- Screw locking
- ComLock rapid locking
- ComLock-S rapid locking (Compatible to Speedtec from TE)

Technical characteristics

Limiting temperature	-40 ... +125 °C
Locking type	Screw locking, ComLock rapid locking, ComLock-S rapid locking
Degree of protection acc. to IEC 60529	IP67, in locked position, IP69 / IPX9K acc. to ISO 20653
Material (hood/housing)	Copper-zinc alloy
Surface (hood/housing)	Nickel plated
Material (seal)	NBR
Colour (seal)	Black
RoHS	compliant with exemption

Specifications and approvals

UL 1977 ECBT2.E235076

Identification	Clamping range (mm)	Part number	Drawing (dimensions in mm)
Circular connectors M23, Signal, Hood, EMC version, Top entry 	3 ... 7 7 ... 12 11 ... 17	09 15 100 0401 09 15 100 0402 09 15 100 0403	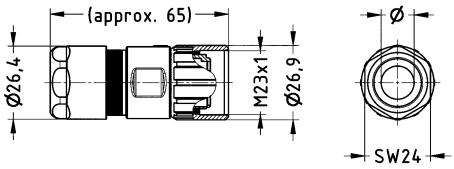
Circular connectors M23, Signal, Hood, Angled entry 	7 ... 12	09 15 100 0601	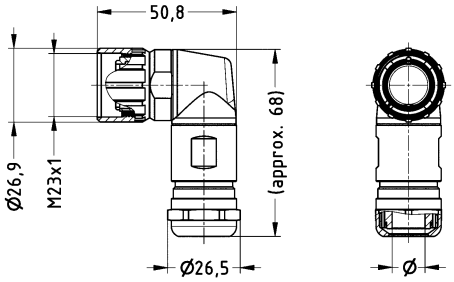

Identification	Clamping range (mm)	Part number	Drawing (dimensions in mm)
Circular connectors M23, Signal, Hood, EMC version, Angled entry 	7 ... 12	09 15 100 0602	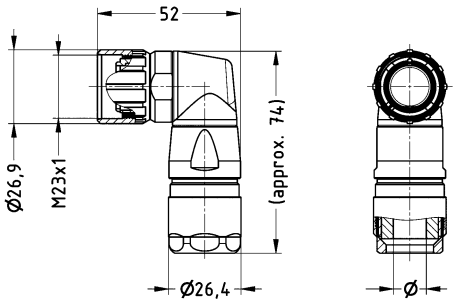
Circular connectors M23, Signal, Hood, EMC version, Rotatable, Angled entry 	7 ... 12	09 15 100 0603	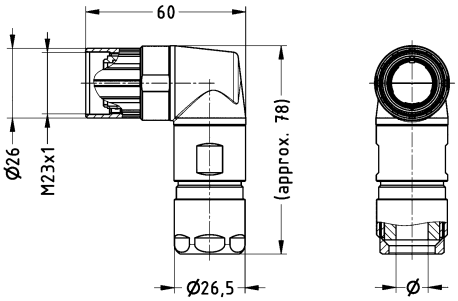
Circular connectors M23, Signal, Hood, EMC version, Top entry, ComLock rapid locking 	3 ... 7 7 ... 12 11 ... 17	09 15 100 0491 09 15 100 0492 09 15 100 0493	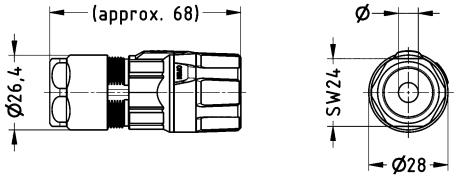
Circular connectors M23, Signal, Hood, EMC version, Top entry, ComLock-S rapid locking  Compatible to Speedtec (TE)	3 ... 7 7 ... 12 11 ... 17	09 15 100 0481 09 15 100 0482 09 15 100 0483	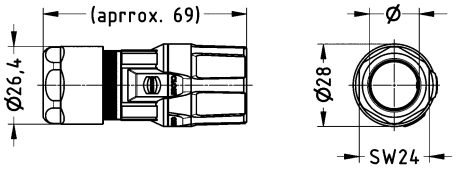
Circular connectors M23, Signal, Cable to cable housing, EMC version, Top entry 	3 ... 7 7 ... 12 11 ... 17	09 15 100 0701 09 15 100 0702 09 15 100 0703	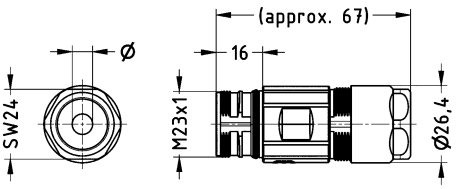

Identification	Clamping range (mm)	Part number	Drawing (dimensions in mm)
Circular connectors M23, Signal, Cover, for hoods, With chain (100 mm)  Not compatible to ComLock		09 15 100 9103	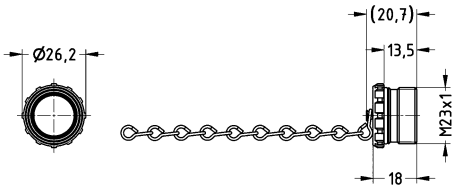
Circular connectors M23, Signal, Cover, for bulkhead mounted housings, for cable to cable housing 		09 15 100 9101	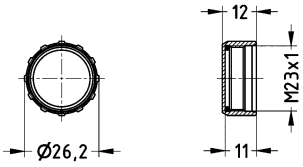
Circular connectors M23, Signal, Cover, for bulkhead mounted housings, for cable to cable housing, With chain (70 mm) 		09 15 100 9102	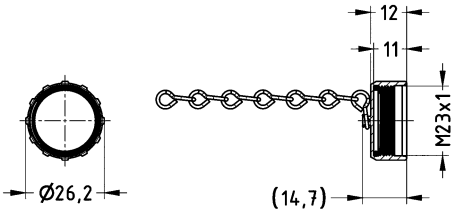

Number of contacts

5+

Crimp termination

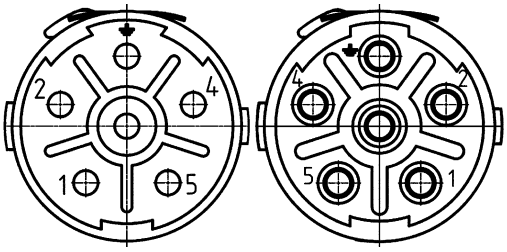

Technical characteristics

Number of contacts	5
Rated current	28 A
Rated voltage	600 V
Rated impulse voltage	4 kV
Pollution degree	3
Insulation resistance	>10^{13} Ω
Limiting temperature	-40 ... +125 °C
Mating cycles	≥500
Conductor cross-section	0.14 ... 4 mm²
Material (insert)	Polyamide (PA)

Technical characteristics

Colour (insert)	Blue
Material flammability class acc. to UL 94	V-0
RoHS	compliant

Specifications and approvals

UL 1977 ECBT2.E235076

Identification	Conductor cross-section (mm²)	Part number Male	Part number Female	Drawing (dimensions in mm)
Circular connectors M23, Power, Inserts, Crimp termination  Please order crimp contacts separately. 6x 2 mm	0.14 ... 4	09 15 606 3001	09 15 606 3101	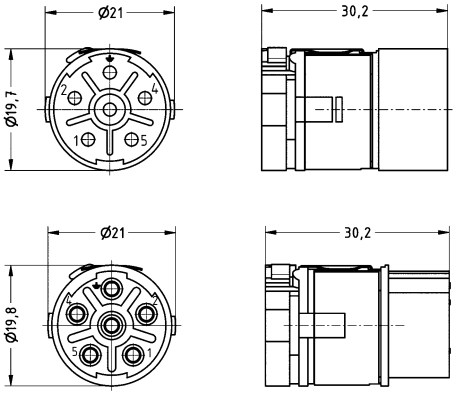

Number of contacts

3+

+ 4 additional signal contacts
Crimp termination

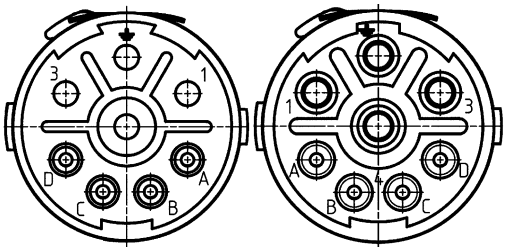

Technical characteristics

Number of contacts	3
Additional contacts	+ 4 additional signal contacts
Rated current	28 A
Rated voltage	600 V
Rated impulse voltage	4 kV
Pollution degree	3
Rated current (signal)	8 A
Rated voltage (signal)	300 V
Rated impulse voltage (signal)	2.5 kV
Pollution degree (signal)	3
Insulation resistance	$>10^{13}$ Ω
Limiting temperature	-40 ... +125 °C

Technical characteristics

Mating cycles	≥500
Conductor cross-section	0.14 ... 4 mm²
Material (insert)	Polyamide (PA)
Colour (insert)	Blue
Material flammability class acc. to UL 94	V-0
RoHS	compliant

Specifications and approvals

UL 1977 ECBT2.E235076

Identification	Conductor cross-section (mm²)	Part number Male	Part number Female	Drawing (dimensions in mm)
Circular connectors M23, Power, Inserts, Crimp termination  Please order crimp contacts separately. 4x 2 mm 4x 1 mm	0.14 ... 4	09 15 608 3001	09 15 608 3101	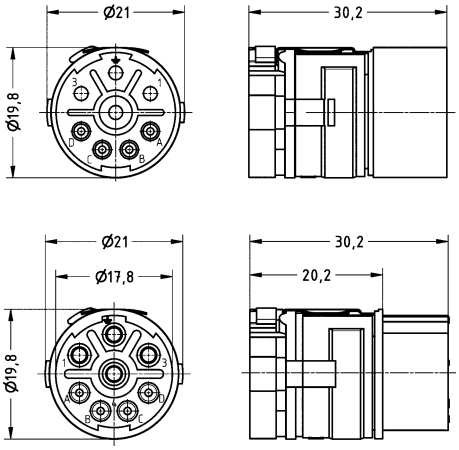

Number of contacts

3+ ⏚

+ 5 additional signal contacts
Crimp termination

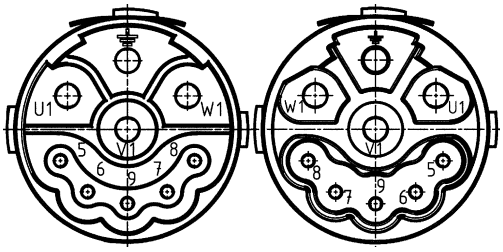

Technical characteristics

Number of contacts	3
Additional contacts	+ 5 additional signal contacts
Rated current	28 A
Rated voltage	630 V
Rated impulse voltage	4 kV
Pollution degree	3
Rated current (signal)	10 A
Rated voltage (signal)	250 V
Rated impulse voltage (signal)	2.5 kV
Pollution degree (signal)	3
Insulation resistance	$>10^{13}$ Ω
Limiting temperature	-40 ... +125 °C

Technical characteristics

Mating cycles	≥500
Conductor cross-section	0.14 ... 4 mm²
Material (insert)	Polyamide (PA)
Colour (insert)	Blue
Material flammability class acc. to UL 94	V-0
RoHS	compliant

Specifications and approvals

UL 1977 ECBT2.E235076

Identification	Conductor cross-section (mm²)	Part number Male	Part number Female	Drawing (dimensions in mm)
Circular connectors M23, Power, Inserts, Mating face (A), Crimp termination  Please order crimp contacts separately. 4x 2 mm 5x 1 mm	0.14 ... 4	09 15 609 3001	09 15 609 3101	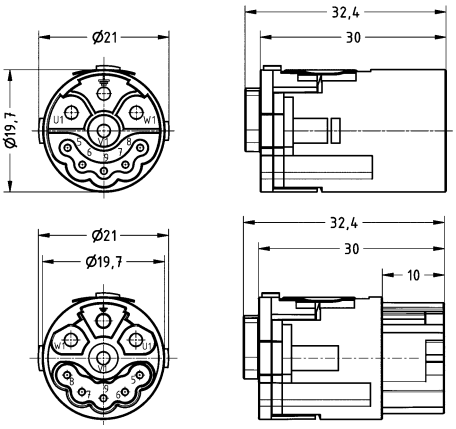

Number of contacts

3+ ⏚

+ 5 additional signal contacts
Crimp termination

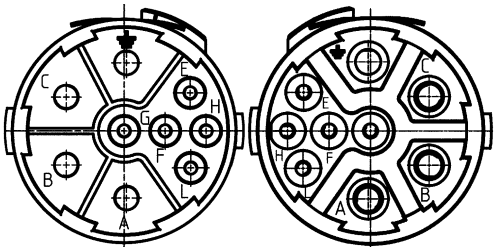

Technical characteristics

Number of contacts	3
Additional contacts	+ 5 additional signal contacts
Rated current	28 A
Rated voltage	630 V
Rated impulse voltage	4 kV
Pollution degree	3
Rated current (signal)	10 A
Rated voltage (signal)	250 V
Rated impulse voltage (signal)	2.5 kV
Pollution degree (signal)	3
Insulation resistance	>10^{13} Ω
Limiting temperature	-40 ... +125 °C

Technical characteristics

Mating cycles	≥500
Conductor cross-section	0.14 ... 4 mm²
Material (insert)	Polyamide (PA)
Colour (insert)	Blue
Material flammability class acc. to UL 94	V-0
RoHS	compliant

Specifications and approvals

UL 1977 ECBT2.E235076

Identification	Conductor cross-section (mm²)	Part number Male	Part number Female	Drawing (dimensions in mm)
Circular connectors M23, Power, Inserts, Mating face (B), Crimp termination  Please order crimp contacts separately. 4x 2 mm 5x 1 mm	0.14 ... 4	09 15 609 3011	09 15 609 3111	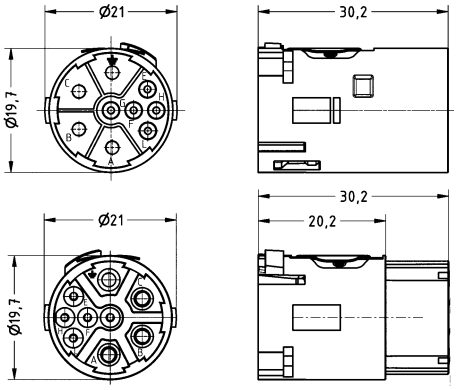

Number of contacts

3+ ⏚

+ 4 additional signal contacts + 4 Data
Crimp termination

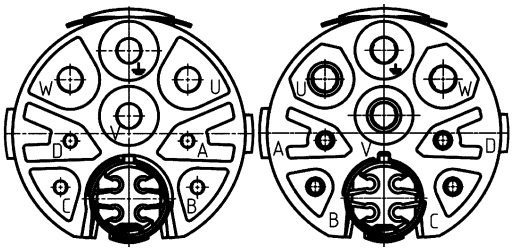

Technical characteristics

Number of contacts	3
Additional contacts	+ 4 additional signal contacts, + 4 Data
Rated current	28 A
Rated voltage	630 V
Rated impulse voltage	4 kV
Pollution degree	3
Rated current (signal)	8 A
Rated voltage (signal)	300 V
Rated impulse voltage (signal)	2.5 kV
Pollution degree (signal)	3
Rated current (data)	2 A
Rated voltage (data)	60 V
Rated impulse voltage (data)	0.5 kV

Technical characteristics

Pollution degree (data)	3
Limiting temperature	-40 ... +125 °C
Mating cycles	≥500
Conductor cross-section	0.08 ... 4 mm²
Material (insert)	Polyamide (PA)
Colour (insert)	Blue
Material flammability class acc. to UL 94	V-0
RoHS	compliant

Specifications and approvals

UL 1977 ECBT2.E235076

Identification	Conductor cross-section (mm²)	Part number Male	Part number Female	Drawing (dimensions in mm)
Circular connectors M23, Hybrid, Inserts, Crimp termination 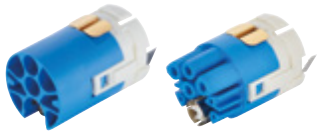 Please order crimp contacts separately. 4x 2 mm 4x 1 mm 4x 0.6 mm	0.08 ... 4	09 15 612 3001	09 15 612 3101	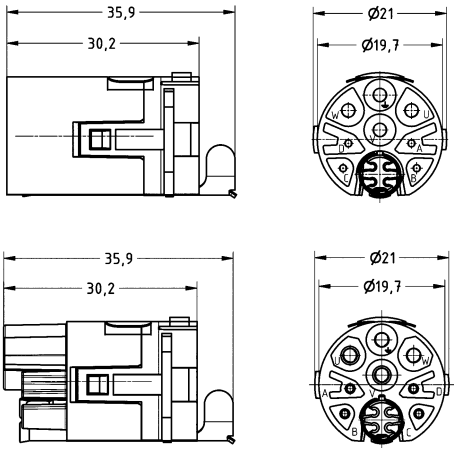

Technical characteristics

Contact resistance	≤3 mΩ
Conductor cross-section	0.08 ... 0.34 mm², 0.14 ... 1 mm², 0.75 ... 2.5 mm², 2.5 ... 4 mm²
Material (contacts)	Copper alloy
Surface (contacts)	Gold plated
RoHS	compliant, compliant with exemption

Specifications and approvals

EN 60664-1
IEC 61984

Identification	Conductor cross-section (mm²)	Part number Male	Part number Female	Drawing (dimensions in mm)
Circular connectors M23, Power, Crimp contact, 0.6 mm, Turned contacts 	0.08 ... 0.34	09 15 600 6191	09 15 600 6291	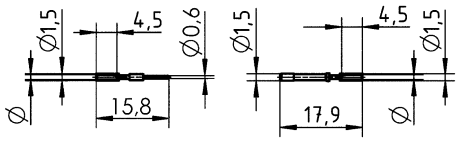 Stripping length 4 mm
Circular connectors M23, Power, Crimp contact, 1 mm, Turned contacts	0.14 ... 1	09 15 600 6101	09 15 600 6201	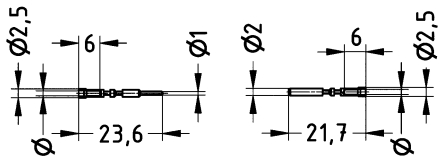 Stripping length 4 mm
Circular connectors M23, Power, Crimp contact, 2 mm, Turned contacts 	0.75 ... 2.5 2.5 ... 4	09 15 600 6121 09 15 600 6122	09 15 600 6221 09 15 600 6222	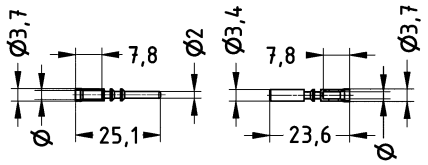 Stripping length 7 mm

Features

- Screw locking
- ComLock rapid locking
- ComLock-S rapid locking (Compatible to Speedtec from TE)

Technical characteristics

Limiting temperature	-40 ... +125 °C
Locking type	Screw locking, ComLock rapid locking, ComLock-S rapid locking
Degree of protection acc. to IEC 60529	IP67 / IP69 / IPX9K acc. to ISO 20653, in locked position
Material (hood/housing)	Copper-zinc alloy
Surface (hood/housing)	Nickel plated
Material (seal)	NBR
Colour (seal)	Black
RoHS	compliant with exemption, compliant

Specifications and approvals

UL 1977 ECBT2.E235076

Identification	Clamping range (mm)	Part number	Drawing (dimensions in mm)
Circular connectors M23, Power, Hood, EMC version, Top entry 	7 ... 12 11 ... 17	09 15 600 0402 09 15 600 0403	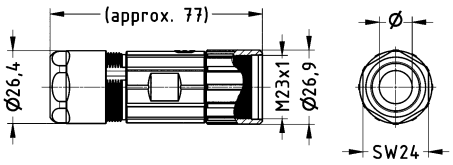
Circular connectors M23, Power, Hood, EMC version, Rotatable, Angled entry 	7 ... 12 11 ... 17	09 15 600 0603 09 15 600 0604	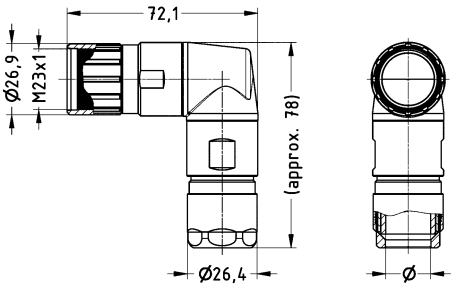

Identification	Clamping range (mm)	Part number	Drawing (dimensions in mm)
Circular connectors M23, Power, Hood, EMC version, Top entry, ComLock rapid locking 	7 ... 12 11 ... 17	09 15 600 0492 09 15 600 0493	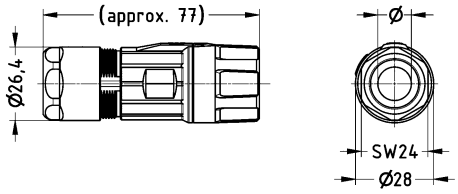
Circular connectors M23, Power, Hood, EMC version, Top entry, ComLock-S rapid locking  Compatible to Speedtec (TE)	7 ... 12 11 ... 17	09 15 600 0482 09 15 600 0483	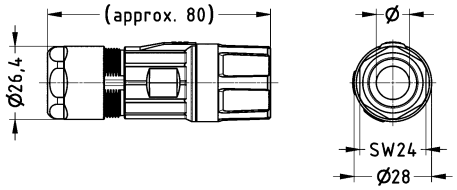
Circular connectors M23, Power, Cable to cable housing, EMC version, Top entry 	7 ... 12 11 ... 17	09 15 600 0702 09 15 600 0703	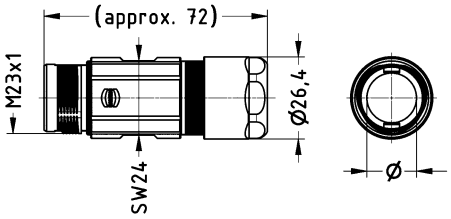
Circular connectors M23, Power, Cover, for hoods, With chain (100 mm)  Not compatible to ComLock		09 15 600 9103	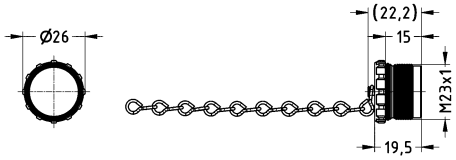
Circular connectors M23, Power, Cover, for bulkhead mounted housings, for cable to cable housing, With chain (70 mm) 		09 15 600 9102	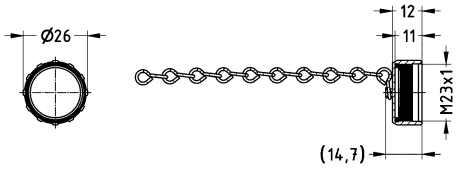

Contents | Page

Number of contacts

5

HARAX® connection technology
Unshielded

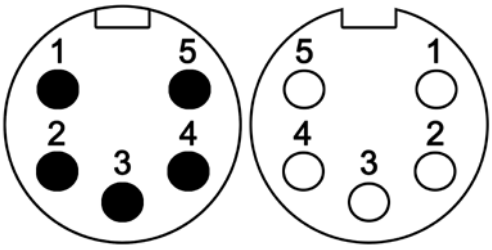

Technical characteristics

Number of contacts	5
Rated current	10 A
Rated voltage conductor-earth	230 V
Rated voltage conductor-conductor	400 V
Rated impulse voltage	4.8 kV
Pollution degree	3
Insulation resistance	>10^8 Ω
Contact resistance	≤10 mΩ
Mating cycles	≥100
Wire outer diameter	≤2.8 mm
Locking type	Screw locking

Technical characteristics

Degree of protection acc. to IEC 60529	IP65 / IP67, when mated
Conductor cross-section	0.75 ... 1.5 mm²
Conductor cross-section	AWG 18 ... AWG 16
Cable diameter	6.8 ... 12.5 mm
Tightening torque	1.5 Nm
Material (insert)	Polyamide (PA), Thermoplastic polyurethane (TPU)
Material (hood/housing)	Polyamide (PA), Zinc die-cast, Thermoplastic polyurethane (TPU)
Material (contacts)	Copper alloy
Surface (contacts)	Gold plated
RoHS	compliant with exemption

Identification	Conductor cross-section (mm²)	Part number Male	Part number Female	Drawing (dimensions in mm)
Circular connectors 7/8”, Cable connector, Straight, *HARAX*® connection technology, Unshielded 	0.75 ... 1.5	21 04 116 1505	21 04 116 2505	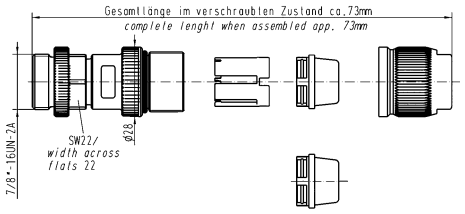 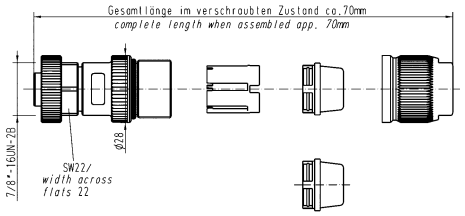

Contents | Page

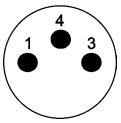

Male, 3 poles

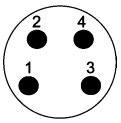

Male, 4 poles

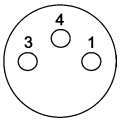

Female, 3 poles

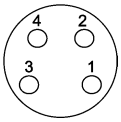

Female, 4 poles

Technical characteristics

System cables with M8 circular connectors without PE

	3 poles		4 poles	
	PVC	PUR	PVC	PUR
Rated voltage	max. 60 V AC/DC	max. 60 V AC/DC	max. 30 V AC/DC	max. 30 V AC/DC
Rated currrent / contact	max. 3 A @ +40 °C	max. 3 A @ +40 °C	max. 3 A @ +40 °C	max. 3 A @ +40 °C
Screw locking	M8x1, self securing	M8x1, self securing	M8x1, self securing	M8x1, self securing
Recommended torque	0.4 Nm	0.4 Nm	0.4 Nm	0.4 Nm
Temperature range (working and storage)	-30 °C … +80 °C	-30 °C … +80 °C	-30 °C … +80 °C	-30 °C … +80 °C
Degree of protection	IP67	IP67	IP67	IP67
Number of wires / wire gauge	3 x 0.25 mm²	3 x 0.25 mm²	3 x 0.25 mm²	3 x 0.25 mm²
Conductor insulation	PVC (bn, bu, bk)	PVC (bn, bu, bk)	PVC (bn, wh, bu, bk)	PVC (bn, wh, bu, bk)
Arrangement of insulated strands	32 x Ø 0.1 mm	32 x Ø 0.1 mm	32 x Ø 0.1 mm	32 x Ø 0.1 mm
Sheath	PVC	PUR (UL, CSA)	PVC	PUR (UL, CSA)
Sheath colour	grey	black	grey	black
Outer diameter	Ø 4.40 ± 0.15 mm	Ø 4.40 ± 0.15 mm	Ø 4.70 ± 0.15 mm	Ø 4.40 ± 0.15 mm
Useable as trailing cable	no	yes	no	yes
Halogen free acc. to	–	DIN VDE 0472 part 815	–	DIN VDE 0472 part 815
Flame retardant acc. to	DIN EN 60332-2-2	cUL20549	DIN EN 60332-2-2	cUL20549
Oil-resistant	–	DIN EN 60811-2-1	–	–

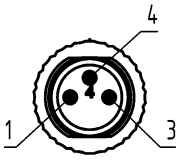

Loading-Plan:

1 brown
3 blue
4 black

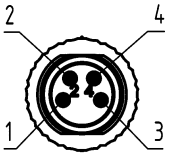

Loading-Plan:

1 brown
2 white
3 blue
4 black

M8 system cables

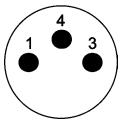

Male, 3 poles

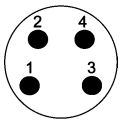

Male, 4 poles

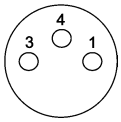

Female, 3 poles

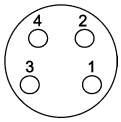

Female, 4 poles

Part number definition

2	1		3	4		X	X	X		X	X	X	X		X	X	X

Connector 1
80 Male straight
81 Female straight
82 Male angled
83 Female angled

Connector 2
00 No connector
80 Male straight
81 Female straight
82 Male angled
83 Female angled

Number of contacts
3 3 poles
4 4 poles

Cable material
80 PVC (3 poles)
81 PVC (4 poles)
88 PUR (3 poles)
89 PUR (4 poles)

Preferred length*
005 0.5 m
010 1.0 m
015 1.5 m
020 2.0 m
050 5.0 m
075 7.5 m
100 10.0 m

* Other cable lengths on request!

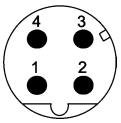

Male, 4 poles

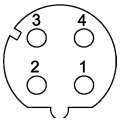

Female, 4 poles

Technical characteristics

System cables with M8 circular connectors shielded, D-coding

	4 poles	4 poles
	PVC	PUR
Rated voltage	max. 50 V AC/60 V DC	max. 50 V AC/60 V DC
Rated currrent / contact	max. 4 A @ +40 °C	max. 4 A @ +40 °C
Screw locking	M8x1, self securing	M8x1, self securing
Recommended torque	0.4 Nm	0.4 Nm
Temperature range (working and storage)	-30 °C … +70 °C	-30 °C … +70 °C
Degree of protection	IP67	IP67
Number of wires / wire gauge	4 x AWG22	4 x AWG22
Conductor insulation	PE (wh, ye, bu, or)	PE (wh, ye, bu, or)
Arrangement of insulated strands	7 x Ø 0.25 mm	7 x Ø 0.25 mm
Sheath	PVC	PUR
Sheath colour	green	green
Outer diameter	Ø 6.20 ± 0.20 mm	Ø 6.20 ± 0.20 mm
Useable as trailing cable	no	yes
Halogen free acc. to	–	IEC 60754
Flame retardant acc. to	UL 1685	IEC 60332-1-2 and UL 2556 VW1
Oil-resistant	IEC 60811-2-1	IEC 60811-2-1 and UL13

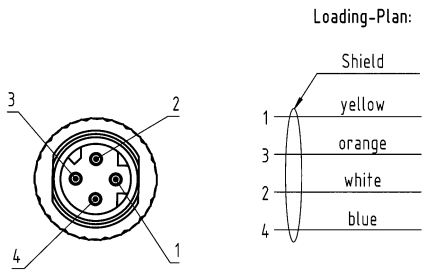

M8 system cables D-coding

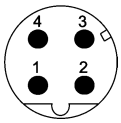

Male, 4 poles

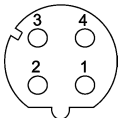

Female, 4 poles

Part number definition

2	1	3	4	X	X	X	X	X	X	X	X	X	X

Connector 1
C1 Male straight
D1 Female straight

Connector 2
00 No connector
C7 Male straight
D7 Female straight

Number of contacts
4 4 poles

Cable material
05 PVC
77 PUR

Preferred length*

005	0.5 m
010	1.0 m
015	1.5 m
020	2.0 m
050	5.0 m
075	7.5 m
100	10.0 m

* Other cable lengths on request!

Male, 3 poles

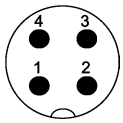

Male, 4 poles

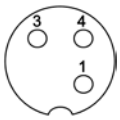

Female, 3 poles

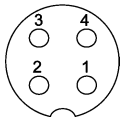

Female, 4 poles

Technical characteristics

System cables with M12 circular connectors without PE, A-coding

	3 poles		4 poles	
	PVC	PUR	PVC	PUR
Rated voltage	max. 250 V AC/DC	max. 250 V AC/DC	max. 250 V AC/DC	max. 250 V AC/DC
Rated currrent / contact	max. 4 A @ +40 °C	max. 4 A @ +40 °C	max. 4 A @ +40 °C	max. 4 A @ +40 °C
Screw locking	M12x1, self securing	M12x1, self securing	M12x1, self securing	M12x1, self securing
Recommended torque	0.6 Nm	0.6 Nm	0.6 Nm	0.6 Nm
Temperature range (working and storage)	-30 °C … +80 °C	-30 °C … +80 °C	-30 °C … +80 °C	-30 °C … +80 °C
Degree of protection	IP67	IP67	IP67	IP67
Number of wires / wire gauge	3 x 0.34 mm²	3 x 0.34 mm²	4 x 0.34 mm²	4 x 0.34 mm²
Conductor insulation	PVC (bn, bu, bk)	PP (bn, bu, bk)	PVC (bn, wh, bu, bk)	PP (bn, wh, bu, bk)
Arrangement of insulated strands	42 x Ø 0.1 mm	42 x Ø 0.1 mm	42 x Ø 0.1 mm	42 x Ø 0.1 mm
Sheath	PVC	PUR (UL, CSA)	PVC	PUR (UL, CSA)
Sheath colour	grey	black	grey	black
Outer diameter	Ø 4.4 ± 0.15 mm	Ø 4.4 ± 0.15 mm	Ø 4.7 ± 0.15 mm	Ø 4.7 ± 0.15 mm
Useable as trailing cable	no	yes	no	yes
Halogen free acc. to	–	DIN VDE 0472 part 815	–	DIN VDE 0472 part 815
Flame retardant acc. to	DIN EN 60332-2-2	cUL20549	DIN EN 60332-2-2	cUL20549
Oil-resistant	–	–	–	DIN EN 60811-2-1

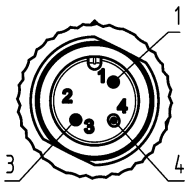

Loading-Plan:

1 brown
3 blue
4 black

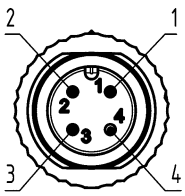

Loading-Plan:

1 brown
2 white
3 blue
4 black

M12 system cables A-coding

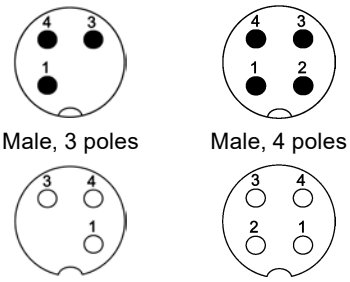

Part number definition

2	1		3	4		X	X	X		X	X	X	X		X	X	X

Connector 1
84 Male straight
85 Female straight
86 Male angled
87 Female angled

Connector 2
00 No connector
84 Male straight
85 Female straight
86 Male angled
87 Female angled

Number of contacts
3 3 poles
4 4 poles

Cable material
83 PVC (3 poles)
84 PVC (4 poles)
90 PUR (3 poles)
91 PUR (4 poles)

Preferred length*
005 0.5 m
010 1.0 m
015 1.5 m
020 2.0 m
050 5.0 m
075 7.5 m
100 10.0 m

* Other cable lengths on request!

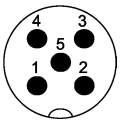

Male, 5 poles

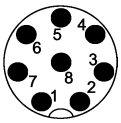

Male, 8 poles

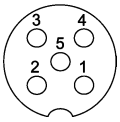

Female, 5 poles

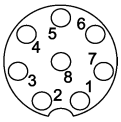

Female, 8 poles

Technical characteristics

System cables with M12 circular connectors without PE, A-coding

	5 poles	5 poles	8 poles	8 poles
	PVC	PUR	PVC	PUR
Rated voltage	max. 60 V AC/DC	max. 60 V AC/DC	max. 30 V AC/DC	max. 30 V AC/DC
Rated currrent / contact	max. 4 A @ +40 °C	max. 4 A @ +40 °C	max. 2 A @ +40 °C	max. 2 A @ +40 °C
Screw locking	M12x1, self securing	M12x1, self securing	M12x1, self securing	M12x1, self securing
Recommended torque	0.6 Nm	0.6 Nm	0.6 Nm	0.6 Nm
Temperature range (working and storage)	-30 °C … +80 °C	-30 °C … +80 °C	-30 °C … +80 °C	-30 °C … +80 °C
Degree of protection	IP67	IP67	IP67	IP67
Number of wires / wire gauge	5 x 0.34 mm^2	5 x 0.34 mm^2	8 x 0.25 mm^2	8 x 0.25 mm^2
Conductor insulation	PVC (bn, wh, bu, bk, gn/ye)	PP (bn, wh, bu, bk, gn/ye)	PVC (wh, bn, gn, ye, gy, pk, bu, rd)	PP (wh, bn, gn, ye, gy, pk, bu, rd)
Arrangement of insulated strands	42 x Ø 0.1 mm	42 x Ø 0.1 mm	32 x Ø 0.1 mm	32 x Ø 0.1 mm
Sheath	PVC	PUR	PVC	PUR
Sheath colour	grey	black	grey	black
Outer diameter	Ø 5.2 ± 0.15 mm	Ø 5.1 ± 0.15 mm	Ø 6.2 ± 0.2 mm	Ø 6.0 ± 0.2 mm
Useable as trailing cable	no	yes	no	yes
Halogen free acc. to	–	DIN VDE 0472 part 815	–	DIN VDE 0472 part 815
Flame retardant acc. to	DIN EN 60332-2-2	cULus 20549	DIN EN 60332-2-2	cULus 20549
Oil-resistant	–	DIN EN 60811-2-1	–	DIN EN 60811-2-1

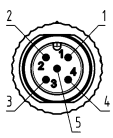

Loading-Plan:

1 brown
2 white
3 blue
4 black
5 green-yellow

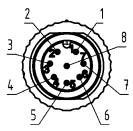

Loading-Plan:

1 white
2 brown
3 green
4 yellow
5 grey
6 pink
7 blue
8 red

M12 system cables A-coding

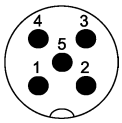

Male, 5 poles

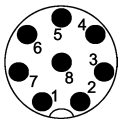

Male, 8 poles

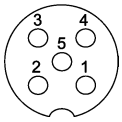

Female, 5 poles

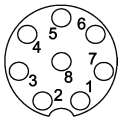

Female, 8 poles

Part number definition

2	1		3	4		X	X	X		X	X	X	X		X	X	X

Connector 1
84 Male straight
85 Female straight
86 Male angled
87 Female angled

Connector 2
00 No connector
84 Male straight
85 Female straight
86 Male angled
87 Female angled

Number of contacts
5 5 poles
8 8 poles

Cable material
70 PUR (8 poles)
82 PVC (8 poles)
85 PVC (5 poles)
92 PUR (5 poles)

Preferred length*
005 0.5 m
010 1.0 m
015 1.5 m
020 2.0 m
050 5.0 m
075 7.5 m
100 10.0 m

* Other cable lengths on request!

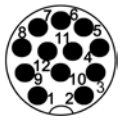

Male, 12 poles

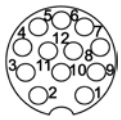

Female, 12 poles

Technical characteristics

System cables with M12 circular connectors without PE, A-coding

	12 poles	
	PVC	PUR
Rated voltage	max. 30 V AC/DC	max. 30 V AC/DC
Rated currrent / contact	max. 1.5 A @ +40 °C	max. 1.5 A @ +40 °C
Screw locking	M12x1, self securing	M12x1, self securing
Recommended torque	0.6 Nm	0.6 Nm
Temperature range (working and storage)	-30 °C … +80 °C	-30 °C … +80 °C
Degree of protection	IP67	IP67
Number of wires / wire gauge	12 x 0.14 mm²	12 x 0.14 mm²
Conductor insulation	PVC (wh, bu, bn, gy, rd, bk, ye, pk, gn, vt, rd/bu, gy/pk)	PP (wh, bu, bn, gy, rd, bk, ye, pk, gn, vt, rd/bu, gy/pk)
Arrangement of insulated strands	18 x Ø 0.1 mm	18 x Ø 0.1 mm
Sheath	PVC	PUR (UL, CSA)
Sheath colour	grey	black
Outer diameter	Ø 6.2 ± 0.2 mm	Ø 6.1 ± 0.2 mm
Useable as trailing cable	no	yes
Halogen free acc. to	-	DIN VDE 0472 part 815
Flame retardant acc. to	DIN EN 60332-1-2	cUL20549
Oil-resistant	DIN EN 60811-2-1	–

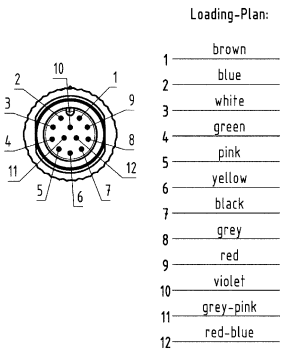

M12 system cables A-coding

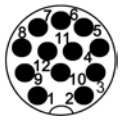

Male, 12 poles

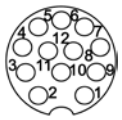

Female, 12 poles

Part number definition

2	1		3	4		X	X	X		X	X	X	X		X	X	X

Connector 1
84 Male straight
85 Female straight
86 Male angled
87 Female angled

Connector 2
00 No connector
84 Male straight
85 Female straight
86 Male angled
87 Female angled

Number of contacts
C 12 poles

Cable material
78 PUR
79 PVC

Preferred length*
005 0.5 m
010 1.0 m
015 1.5 m
020 2.0 m
050 5.0 m
075 7.5 m
100 10.0 m

* Other cable lengths on request!

Male, 4 poles

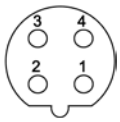

Female, 4 poles

Technical characteristics

System cables with M12 circular connectors shielded, B-coding

	4 poles	
	PVC	PUR
Rated voltage	max. 160 V AC/DC	max. 160 V AC/DC
Rated currrent / contact	max. 4 A @ +40 °C	max. 4 A @ +40 °C
Screw locking	M12x1, self securing	M12x1, self securing
Recommended torque	0.6 Nm	0.6 Nm
Temperature range (working and storage)	-30 °C … +80 °C	-30 °C … +80 °C
Degree of protection	IP67	IP67
Number of wires / wire gauge	2 x AWG 22	2 x AWG 24
Conductor insulation	PVC (rd, gn)	PE (rd, gn)
Arrangement of insulated strands	1 x Ø 0.65 mm	19 x Ø 0.14 mm
Sheath	PVC	PUR (UL, CSA)
Sheath colour	violet	violet
Outer diameter	Ø 8.0 ± 0.4 mm	Ø 8.5 ± 0.4 mm
Useable as trailing cable	no	yes
Halogen free acc. to	–	DIN VDE 0472 part 815
Flame retardant acc. to	DIN EN 60332-1-2	DIN EN 60332-1-2
Oil-resistant	IEC 80811-2-1 (4h/60°C)	DIN EN 60811-2-1

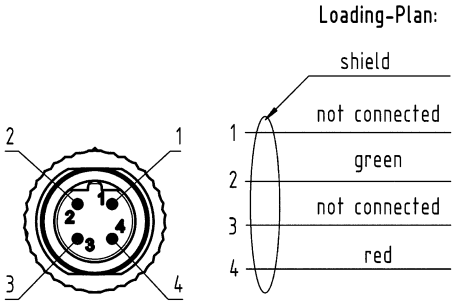

M12 system cables B-coding

Male, 4 poles

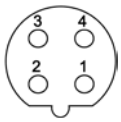

Female, 4 poles

Part number definition

2	1	3	4	X	X	X	X	X	X	X	X	X	X	X

Connector 1
88 Male straight
89 Female straight
90 Male angled
91 Female angled

Connector 2
00 No connector
88 Male straight
89 Female straight
90 Male angled
91 Female angled

Number of contacts
4 4 poles

Cable material
86 PVC
87 PUR

Preferred length*
005 0.5 m
010 1.0 m
015 1.5 m
020 2.0 m
050 5.0 m
075 7.5 m
100 10.0 m

* Other cable lengths on request!

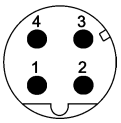

Male, 4 poles

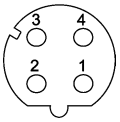

Female, 4 poles

Technical characteristics

System cables with M12 circular connectors shielded, D-coding

	4 poles	
	PVC	PUR
Rated voltage	max. 160 V AC/DC	max. 160 V AC/DC
Rated currrent / contact	max. 4 A @ +40 °C	max. 4 A @ +40 °C
Screw locking	M12x1, self securing	M12x1, self securing
Recommended torque	0.6 Nm	0.6 Nm
Temperature range (working and storage)	-30 °C … +80 °C	-30 °C … +80 °C
Degree of protection	IP67	IP67
Number of wires / wire gauge	4 x AWG 22	4 x AWG 22
Conductor insulation	PE (ye, wh, og, bu)	PE (ye, wh, og, bu)
Arrangement of insulated strands	7 x Ø 0.25 mm (AWG 22)	7 x Ø 0.25 mm (AWG 22)
Sheath	PVC	PUR (UL, CSA)
Sheath colour	green	green
Outer diameter	Ø 6.5 ± 0.2 mm	Ø 6.5 ± 0.2 mm
Useable as trailing cable	no	yes
Halogen free acc. to	–	IEC 60754
Flame retardant acc. to	UL 1685 (CSA FT4)	IEC 60332-1-2 und UL 2556 VW1
Oil-resistant	IEC 80811-2-1 (4h/70°C)	IEC 60811-2-1 und UL13

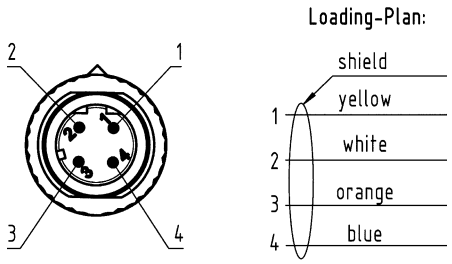

M12 system cables D-coding

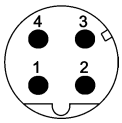

Male, 4 poles

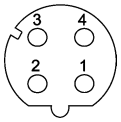

Female, 4 poles

Part number definition

2	1	3	4	X	X	X	X	X	X	X	X	X	X

Connector 1
92 Male straight
93 Female straight
94 Male angled
95 Female angled

Connector 2
00 No connector
92 Male straight
93 Female straight
94 Male angled
95 Female angled

Number of contacts
4 4 poles

Cable material
05 PVC
77 PUR

Preferred length*
005 0.5 m
010 1.0 m
015 1.5 m
020 2.0 m
050 5.0 m
075 7.5 m
100 10.0 m

* Other cable lengths on request!

HARTING M12
system cable, 4-wire, straight resp. angled

Features

• Connector types	M12 D-coding, connector straight resp. angled
• Category	Cat. 5
• Number of wires	4
• Wiring	1:1
• Sheath material	Elastomer, electron beam cross-linked

Application

- For harsh industrial environments
- For installation in railway applications

Benefits

- Robust design
- Protection degree IP65/IP67
- Fire protection acc. to EN 45545-1, -2 and -5

Technical characteristics

Connector types	HARTING M12 D-coding, overmoulded
Railway cords type	4 x AWG 22/7, stranded
Sheath material	Elastomer, electron beam cross-linked
Wiring	4 pole, 1:1
Transmission performance	Class D up to 100 MHz acc. to ISO/IEC 11801, EN 50173-1
Transmission rate	10/100 Mbit/s
Shielding	Fully shielded, 360° shielding contact
Operating temperature range fix operation	-40 °C … +85 °C
Colour	Black or blue

HARTING M12
system cable, 4-wire, straight resp. angled

Identification		Part number	Drawing	Dimensions in mm
HARTING M12 system cable, 4-wire, straight				
one side assembled				
		Black		
Length	0.5 m	09 48 220 0011 005		
	1.0 m	09 48 220 0011 010		
	2.0 m	09 48 220 0011 020		
	2.5 m	09 48 220 0011 025		
	5.0 m	09 48 220 0011 050		
	7.5 m	09 48 220 0011 075		
	10.0 m	09 48 220 0011 100		
	15.0 m	09 48 220 0011 150		
	20.0 m	09 48 220 0011 200		
		Blue		
Length	0.5 m	21 33 390 0413 005		
	1.0 m	21 33 390 0413 010		
	2.0 m	21 33 390 0413 020		
	2.5 m	21 33 390 0413 025		
	5.0 m	21 33 390 0413 050		
	7.5 m	21 33 390 0413 075		
	10.0 m	21 33 390 0413 100		
	15.0 m	21 33 390 0413 150		
	20.0 m	21 33 390 0413 200		
both sides assembled				
		Black		
Length	0.5 m	09 48 222 2011 005		
	1.0 m	09 48 222 2011 010		
	2.0 m	09 48 222 2011 020		
	2.5 m	09 48 222 2011 025		
	5.0 m	09 48 222 2011 050		
	7.5 m	09 48 222 2011 075		
	10.0 m	09 48 222 2011 100		
	15.0 m	09 48 222 2011 150		
	20.0 m	09 48 222 2011 200		

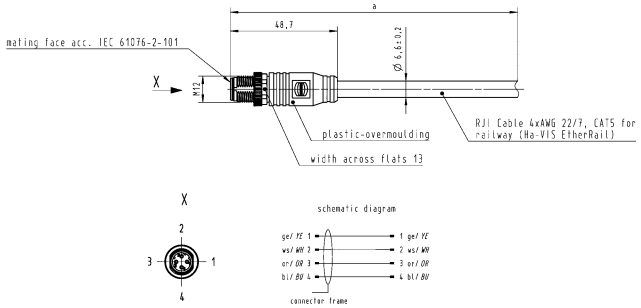

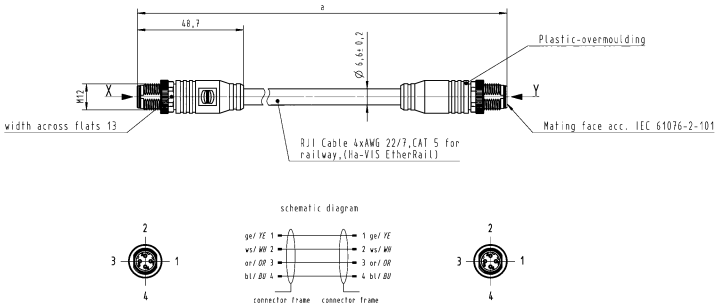

Other cable lengths on request!

HARTING M12
system cable, 4-wire, straight resp. angled

Identification		Part number	Drawing	Dimensions in mm
HARTING M12 system cable, 4-wire, angled				
one side assembled				
		Black		
Length	0.5 m	09 48 800 0011 005		
	1.0 m	09 48 800 0011 010		
	2.0 m	09 48 800 0011 020		
	2.5 m	09 48 800 0011 025		
	5.0 m	09 48 800 0011 050		
	7.5 m	09 48 800 0011 075		
	10.0 m	09 48 800 0011 100		
	15.0 m	09 48 800 0011 150		
	20.0 m	09 48 800 0011 200		
both sides assembled				
		Black		
Length	0.5 m	09 48 808 0011 005		
	1.0 m	09 48 808 0011 010		
	2.0 m	09 48 808 0011 020		
	2.5 m	09 48 808 0011 025		
	5.0 m	09 48 808 0011 050		
	7.5 m	09 48 808 0011 075		
	10.0 m	09 48 808 0011 100		
	15.0 m	09 48 808 0011 150		
	20.0 m	09 48 808 0011 200		

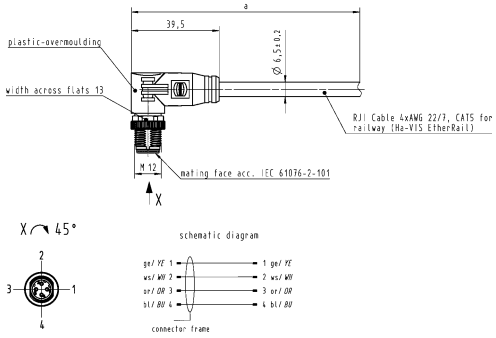

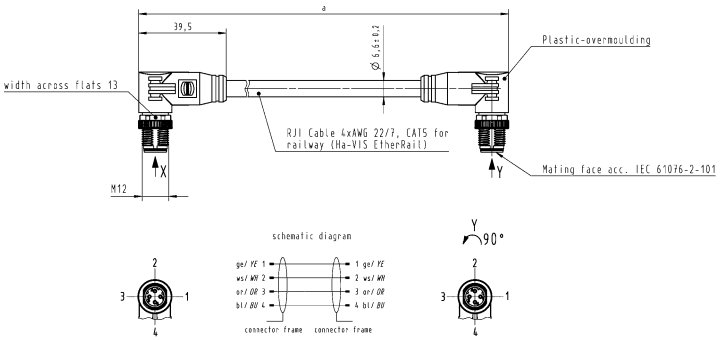

Other cable lengths on request!

HARTING M12/RJ45
system cable, 4-wire, straight

Identification		Part number	Drawing	Dimensions in mm
HARTING M12/RJ45 system cable, 4-wire both sides assembled		Black	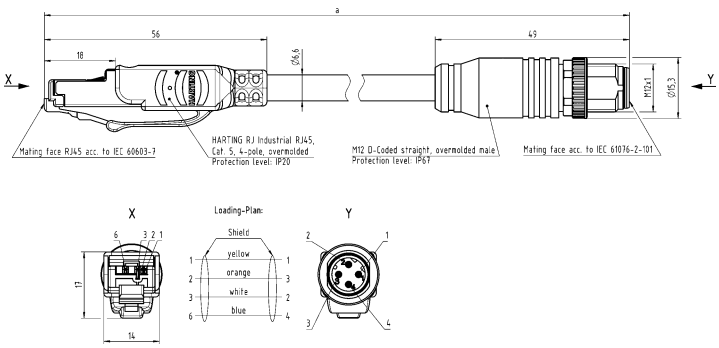	
Length	1.0 m	09 48 022 2011 010		
	1.5 m	09 48 022 2011 015		
	2.0 m	09 48 022 2011 020		
	3.0 m	09 48 022 2011 030		
	5.0 m	09 48 022 2011 050		
	7.5 m	09 48 022 2011 075		
	10.0 m	09 48 022 2011 100		
	15.0 m	09 48 022 2011 150		
	20.0 m	09 48 022 2011 200		

Other cable lengths on request!

HARTING M12
system cable, 4-wire, straight, PushPull Press & Go

Features

• Connector types	M12 D-coding PushPull
• Category	Cat. 5
• Number of wires	4
• Wiring	1:1
• Sheath material	Elastomer, electron beam cross-linked

Application

- For harsh industrial environments
- For installation in railway applications

Benefits

- Robust design
- Protection degree IP65/IP67
- Fire protection acc. to EN 45545-1, -2 and -5
- M12 PushPull for a fast and vibration-free connection

Technical characteristics

Connector types	HARTING M12 D-coding PushPull
Railway cords type	4 x AWG 22/7, stranded
Sheath material	Elastomer, electron beam cross-linked
Wiring	4 pole, 1:1
Transmission performance	Class D up to 100 MHz acc. to ISO/IEC 11801, EN 50173-1
Transmission rate	10/100 Mbit/s
Shielding	Fully shielded, 360° shielding contact
Operating temperature range fix operation	-40 °C … +85 °C
Colour	Black

Identification		Part number	Drawing	Dimensions in mm
HARTING M12 system cable, 4-wire both sides assembled		Black		
Length	1.0 m	21 33 232 3401 010		
	1.5 m	21 33 232 3401 015		
	2.0 m	21 33 232 3401 020		
	3.0 m	21 33 232 3401 030		
	5.0 m	21 33 232 3401 050		
	10.0 m	21 33 232 3401 100		

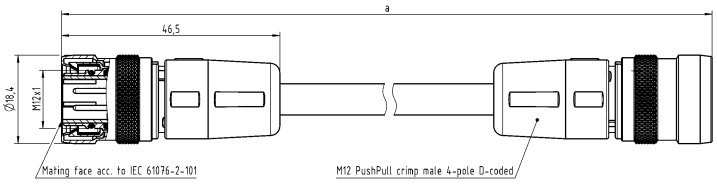

Other cable lengths on request!

Notes

Press & Go M12
system cable, 8-wire, Cat. 6_A

Features

- Connector types: M12 X-coding
- Category: Cat. 6_A
- Number of wires: 8
- Wiring: 1:1
- Sheath material: PVC/PUR

Application

- Industrial cabling IP65/IP67
- Transmission up to 10 Gbit/s
- Camera systems

Benefits

- Very robust metal housing M12 with degree of protection IP65/IP67
- Vibration proof crimp connection
- Maximum data rates through the configuration of the contacts in conformance with Ethernet technology
- Minimal interaction and perfect shielding through paired shielding of the contacts
- Fault proof connection through coding of the connector face. A connection error with other 8 pole M12's is impossible
- PROFINET compliant Type X mating face
- Oil proof acc. to EN 60811-2-1 (PUR)

Technical characteristics

Connector types	Press & Go M12 connector X coding acc. to IEC 61076-2-109
Cable types	PVC: 4 x 2 x AWG 26/7, cat. 6_A, S/FTP, shielded PUR: 4 x 2 x AWG 26/7, cat. 7, S/FTP, shielded
Sheath material	PVC/PUR
Wiring	8 pole, 1:1
Transmission performance	Category 6_A, Class E_A up to 500 MHz acc. to ISO/IEC 11801, EN 50173-1
Transmission rate	10/100 Mbit/s 1/ 10 Gbit/s
Shielding	Fully shielded, 360° shielding contact
Operating temperature range	-40 °C … +70 °C
Colour	Yellow

Press & Go M12
system cable, 8-wire, Cat. 6_A

Identification		Part number PUR	Part number PVC
Press & Go M12 system cable, 8-wire			
one side assembled			
Length	1.0 m	21 33 050 0850 010	21 33 050 0855 010
	2.0 m	21 33 050 0850 020	21 33 050 0855 020
	3.0 m	21 33 050 0850 030	21 33 050 0855 030
	5.0 m	21 33 050 0850 050	21 33 050 0855 050
	10.0 m	21 33 050 0850 100	21 33 050 0855 100
both sides assembled			
Length	1.0 m	21 33 050 5850 010	21 33 050 5855 010
	2.0 m	21 33 050 5850 020	21 33 050 5855 020
	3.0 m	21 33 050 5850 030	21 33 050 5855 030
	5.0 m	21 33 050 5850 050	21 33 050 5855 050
	10.0 m	21 33 050 5850 100	21 33 050 5855 100

Other cable lengths on request!

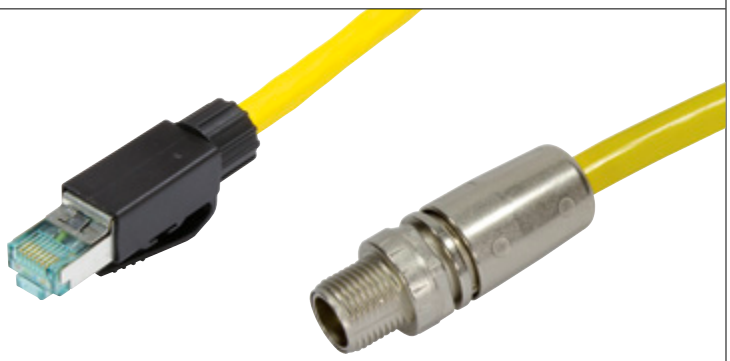

M12/RJ45
system cable, 8-wire, Cat. 6_A

Features

- Connector types: M12 X-coding to RJ45
- Category: Cat. 6_A
- Number of wires: 8
- Wiring: 1:1
- Sheath material: PVC/PUR

Application

- Industrial cabling IP65/IP67
- Transmission up to 10 Gbit/s
- Camera systems

Benefits

- Very robust metal housing M12 with degree of protection IP65
- Vibration proof crimp connection
- Maximum data rates through the configuration of the contacts in conformance with Ethernet technology
- Minimal interaction and perfect shielding through paired shielding of the contacts
- Fault proof connection through coding of the connector face. A connection error with other 8 pole M12's is impossible
- PROFINET compliant Type X mating face

Technical characteristics

Connector types	*har*-speed M12 connector X coding acc. to IEC 61076-2-109 and RJ45 Gigalink
Cable types	4 x 2 x AWG 26/7, cat. 6_A, S/FTP, shielded
Sheath material	PVC/PUR
Wiring	8 pole, 1:1
Transmission performance	Category 6_A, Class E_A up to 500 MHz acc. to ISO/IEC 11801, EN 50173-1
Transmission rate	10/100 Mbit/s 1/ 10 Gbit/s
Shielding	Fully shielded, 360° shielding contact
Operating temperature range	-40 °C … +70 °C
Colour	Yellow

Identification		Part number PUR	Part number PVC
M12/RJ45 system cable, 8-wire		Yellow	Yellow
Length	0.5 m	09 48 932 3756 005	09 48 932 3757 005
	1.0 m	09 48 932 3756 010	09 48 932 3757 010
	1.5 m	09 48 932 3756 015	09 48 932 3757 015
	2.0 m	09 48 932 3756 020	09 48 932 3757 020
	2.5 m	09 48 932 3756 025	09 48 932 3757 025
	5.0 m	09 48 932 3756 050	09 48 932 3757 050
	7.5 m	09 48 932 3756 075	09 48 932 3757 075
	10.0 m	09 48 932 3756 100	09 48 932 3757 100

Other cable lengths on request!

X-coding

Female, 8 poles

har-speed M12
Panel feed-throughs with cable

Identification	Part number	Drawing	Dimensions in mm
har-speed M12 PFT with cable 		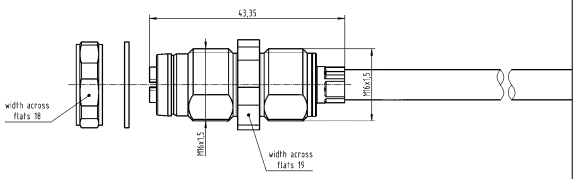	
with 0.3 m cable “Cat. 7_A (2 x AWG 27/7) PIMF”. Other lengths on request	21 33 080 0850 003		
with 0.3 m cable “HA-VIS EtherRail Cat. 7 4 x (2 x AWG 24/7)”. Other lengths on request	21 33 070 0853 003		

Other cable lengths on request!

HARTING M12
system cable, 8-wire, straight

Features

• Connector type	M12 X-coding
• Category	6_A
• Number of wires	8
• Wire design	AWG 24/7
• Wire diameter	(8.1 ± 0.4) mm
• Sheath material	Elastomer, electron beam cross-linked

Application

- For harsh industrial environments
- For installation in railway applications

Benefits

- Transmission of Gigabit and 10 Gigabit Ethernet acc. IEEE 802.3 and multimedia services
- Fire protection acc. EN 45545-1, -2 and -5, flame retardant and heat resistant acc. DIN 5510 (1-4) and EN 50264-1
- UV resistant, RoHS conform, halogen free LSZH

Technical characteristics

Connector types	HARTING M12 X-coding
Cable structure	4 x 2, Twisted Pair, shielded, PIMF
Railway cords type	4 x 2 x AWG 24/7 Category 7, Class F up to 600 MHz acc. to ISO/IEC 11801 and EN 50173-1
Sheath material	Elastomer, electron beam, cross-linked
Cable sheath diameter	(8.1 ± 0.4) mm
Transmission performance	Category 6_A, Class E_A up to 500 MHz acc. to ISO/IEC 11801 and EN 50173-1
Transmission rate	1/10 Gbit/s
Shielding	Paired shielded with additional cable shield
Operating temperature range	-40 °C … +80 °C
Colour	Black

HARTING M12
system cable, 8-wire, straight

Identification		Part number	Drawing	Dimensions in mm
HARTING M12 system cable, 8-wire, Slim Design				
both sides assembled		Black		
Length	0.5 m	21 33 010 1853 005		
	1.0 m	21 33 010 1853 010		
	2.0 m	21 33 010 1853 020		
	2.5 m	21 33 010 1853 025		
	5.0 m	21 33 010 1853 050		
	7.5 m	21 33 010 1853 075		
	10.0 m	21 33 010 1853 100		
	15.0 m	21 33 010 1853 150		
	20.0 m	21 33 010 1853 200		
HARTING M12 system cable, 8-wire, Press & Go				
one side assembled		Black		
Length	0.5 m	21 33 050 0853 005		
	1.0 m	21 33 050 0853 010		
	2.0 m	21 33 050 0853 020		
	2.5 m	21 33 050 0853 025		
	5.0 m	21 33 050 0853 050		
	7.5 m	21 33 050 0853 075		
	10.0 m	21 33 050 0853 100		
	15.0 m	21 33 050 0853 150		
	20.0 m	21 33 050 0853 200		
both sides assembled		Black		
Length	0.5 m	21 33 050 5853 005		
	1.0 m	21 33 050 5853 010		
	2.0 m	21 33 050 5853 020		
	2.5 m	21 33 050 5853 025		
	5.0 m	21 33 050 5853 050		
	7.5 m	21 33 050 5853 075		
	10.0 m	21 33 050 5853 100		
	15.0 m	21 33 050 5853 150		
	20.0 m	21 33 050 5853 200		

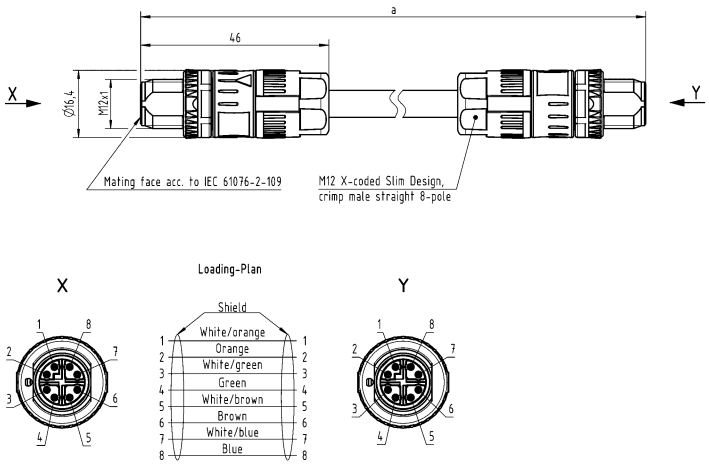

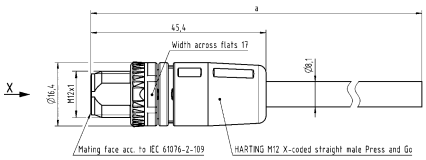

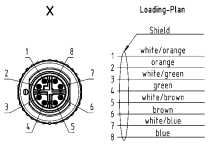

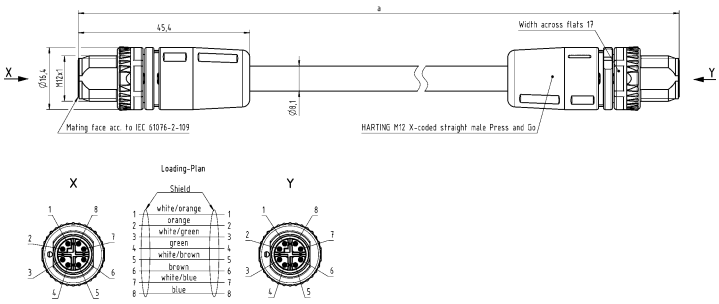

Other cable lengths on request!

HARTING M12
system cable, 8-wire, straight, PushPull Press & Go

Features

• Connector type	M12 X-coding PushPull
• Category	6_A
• Number of wires	8
• Wire design	AWG 24/7
• Wire diameter	(8.1 ± 0.4) mm
• Sheath material	Elastomer, electron beam cross-linked

Application

- For harsh industrial environments
- For installation in railway applications

Benefits

- Transmission of Gigabit and 10 Gigabit Ethernet acc. IEEE 802.3 and multimedia services
- Fire protection acc. EN 45545-1, -2 and -5, flame retardant and heat resistant acc. DIN 5510 (1-4) and EN 50264-1
- UV resistant, RoHS conform, halogen free LSZH
- M12 PushPull for a fast and vibration-free connection

Technical characteristics

Connector types	HARTING M12 X-coding PushPull
Cable structure	4 x 2, Twisted Pair, shielded, PIMF
Railway cords type	4 x 2 x AWG 24/7 Category 7, Class F up to 600 MHz acc. to ISO/IEC 11801 and EN 50173-1
Sheath material	Elastomer, electron beam, cross-linked
Cable sheath diameter	(8.1 ± 0.4) mm
Transmission performance	Category 6_A, Class E_A up to 500 MHz acc. to ISO/IEC 11801 and EN 50173-1
Transmission rate	1/10 Gbit/s
Shielding	Paired shielded with additional cable shield
Operating temperature range	-40 °C … +80 °C
Colour	Black

HARTING M12
system cable, 8-wire, straight, PushPull Press & Go

Identification		Part number PVC	Drawing	Dimensions in mm
HARTING M12 system cable, 8-wire, PushPull Press & Go				
one side assembled		Black		
Length	0.5 m	21 33 290 0853 005		
	1.0 m	21 33 290 0853 010		
	2.0 m	21 33 290 0853 020		
	2.5 m	21 33 290 0853 025		
	5.0 m	21 33 290 0853 050		
	7.5 m	21 33 290 0853 075		
	10.0 m	21 33 290 0853 100		
	15.0 m	21 33 290 0853 150		
	20.0 m	21 33 290 0853 200		
both sides assembled		Black		
Length	0.5 m	21 33 292 9853 005		
	1.0 m	21 33 292 9853 010		
	2.0 m	21 33 292 9853 020		
	2.5 m	21 33 292 9853 025		
	5.0 m	21 33 292 9853 050		
	7.5 m	21 33 292 9853 075		
	10.0 m	21 33 292 9853 100		
	15.0 m	21 33 292 9853 150		
	20.0 m	21 33 292 9853 200		

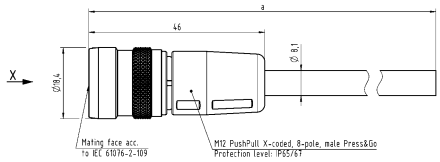

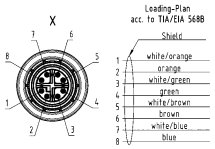

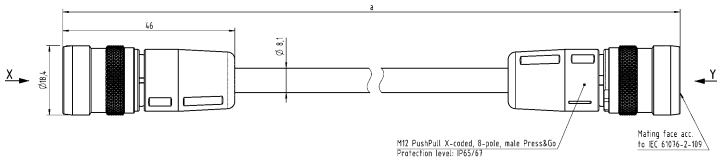

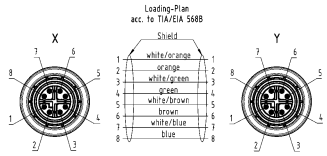

Other cable lengths on request!

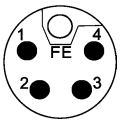

Male, 4 + FE

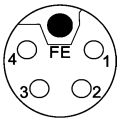

Female, 4 + FE

Technical characteristics

System cables with M12 circular connectors with FE, L-coding

	5 poles	5 poles	5 poles	5 poles
	PVC	PVC	PVC shielded	PVC shielded
Rated voltage	max. 63 V AC/DC	max. 63 V AC/DC	max. 63 V AC/DC	max. 63 V AC/DC
Rated currrent / contact	max. 16 A	max. 16 A	max. 16 A	max. 16 A
Screw locking	M12x1, self securing	M12x1, self securing	M12x1, self securing	M12x1, self securing
Recommended torque	0.6 Nm	0.6 Nm	0.6 Nm	0.6 Nm
Temperature range connector (working and storage)	-5 °C … +50 °C	-5 °C … +50 °C	-5 °C … +50 °C	-5 °C … +50 °C
Degree of protection	IP67	IP67	IP67	IP67
Number of wires / wire gauge	5 x 1.5 mm²	5 x 2.5 mm²	5 x 1.5 mm²	5 x 2.5 mm²
Conductor insulation	PVC	PVC	PVC	PVC
Sheath	PVC	PVC	PVC	PVC
Sheath colour	grey	grey	grey	grey
Outer diameter	Ø 8.3 mm	Ø 10.1 mm	Ø 9.2 mm	Ø 11.0 mm
Temperature range cable (flexible / fixed)	-15 °C … +80 °C -40 °C … +80 °C	-15 °C … +80 °C -40 °C … +80 °C	-10 °C … +80 °C -40 °C … +80 °C	-10 °C … +80 °C -40 °C … +80 °C
Useable as trailing cable	no	no	no	no
Halogen free acc. to	no	no	no	no
Flame retardant acc. to	IEC 60332-1-2	IEC 60332-1-2	IEC 60332-1-2	IEC 60332-1-2
Oil-resistant	yes	yes	yes	yes

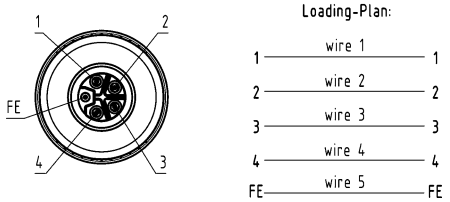

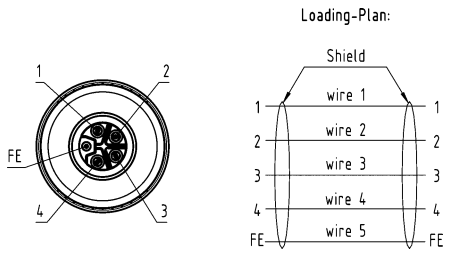

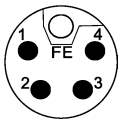

Male, 4 + FE

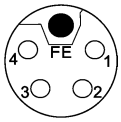

Female, 4 + FE

Part number definition

2	1		3	3		X	X	X		X	X	X	X		X	X	X

Connector 1
A8 Male straight
A7 Female straight

Connector 2
00 No connector
A8 Male straight
A7 Female straight

Number of contacts
5 4 + FE

Cable material
18 PVC shielded (5 x 1.5 mm²)
19 PVC shielded (5 x 2.5 mm²)
23 PVC (5 x 1.5 mm²)
24 PVC (5 x 2.5 mm²)

Preferred length*
005 0.5 m
010 1.0 m
015 1.5 m
020 2.0 m
050 5.0 m
075 7.5 m
100 10.0 m

* Other cable lengths on request!

Male, 2 + PE

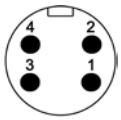

Male, 4 poles

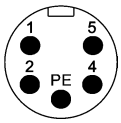

Male, 4 + PE

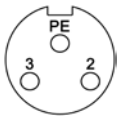

Female, 2 + PE

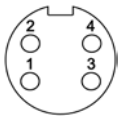

Female, 4 poles

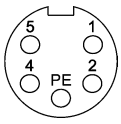

Female, 4 + PE

Technical characteristics

7/8“ system cables

	3 poles (2+PE)		4 poles		5 poles (4+PE)	
	PVC	PUR	PVC	PUR	PVC	PUR
Rated voltage	max. 300 V AC/DC	max. 300 V AC/DC	max. 300 V AC/DC	max. 300 V AC/DC	max. 300 V AC/DC	max. 300 V AC/DC
Rated currrent / contact	max. 10 A @ +40 °C	max. 10 A @ +40 °C	max. 10 A @ +40 °C	max. 10 A @ +40 °C	max. 10 A @ +40 °C	max. 10 A @ +40 °C
Screw locking	7/8", self securing	7/8", self securing	7/8", self securing	7/8", self securing	7/8", self securing	7/8", self securing
Temperature range (working and storage)	-30 °C … +80 °C	-30 °C … +80 °C	-30 °C … +80 °C	-30 °C … +80 °C	-30 °C … +80 °C	-30 °C … +80 °C
Degree of protection	IP67	IP67	IP67	IP67	IP67	IP67
Number of wires / wire gauge	3 x 1.5 mm²	3 x 1.5 mm²	4 x 1.5 mm²	4 x 1.5 mm²	5 x 1.5 mm²	5 x 1.5 mm²
Conductor insulation	PVC (bn, bu, gn/ye)	PP (bn, bu, gn/ye)	PVC (bn, wh, bu, bk)	PP (bn, wh, bu, bk)	PVC (bu, bk, wh, bn, gn/ye)	PP (bu, bk, wh, bn, gn/ye)
Arrangement of insulated strands	84 x Ø 0.15 mm	84 x Ø 0.15 mm	84 x Ø 0.15 mm	84 x Ø 0.15 mm	84 x Ø 0.15 mm	84 x Ø 0.15 mm
Sheath	PVC	PUR (UL, CSA)	PVC	PUR (UL, CSA)	PVC	PUR (UL, CSA)
Sheath colour	grey	black	grey	black	grey	black
Outer diameter	Ø 7.0 ± 0.2 mm	Ø 7.0 ± 0.2 mm	Ø 7.8 ± 0.2 mm	Ø 7.1 ± 0.2 mm	Ø 8.5 ± 0.2 mm	Ø 7.8 ± 0.2 mm
Useable as trailing cable	no	yes	no	yes	no	yes
Halogen free acc. to	–	DIN VDE 0472 part 815	–	DIN VDE 0472 part 815	–	DIN VDE 0472 part 815
Flame retardant acc. to	DIN EN 60332-1-2	DIN EN 60332-1-2	DIN EN 60332-1-2	cUL20549	DIN EN 60332-1-2	cUL20549
Oil-resistant	IEC 60811-2-1	DIN EN 60811-2-1	–	–	–	–

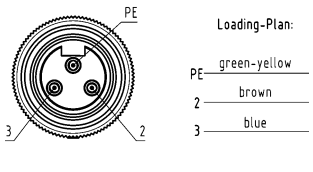

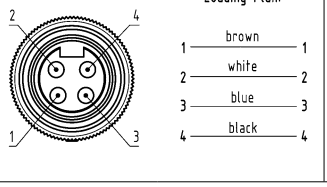

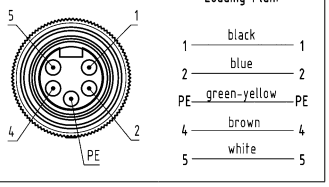

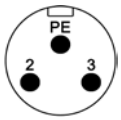

Male, 2 + PE

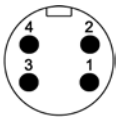

Male, 4 poles

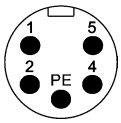

Male, 4 + PE

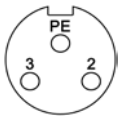

Female, 2 + PE

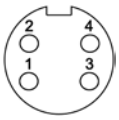

Female, 4 poles

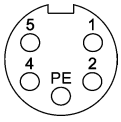

Female, 4 + PE

Part number definition

2	1		3	4		X	X	X		X	X	X	X		X	X	X

Connector 1
96 Male straight
97 Female straight
98 Male angled
99 Female angled

Connector 2
00 No connector
96 Male straight
97 Female straight
98 Male angled
99 Female angled

Number of contacts
3 2 + PE
4 4 poles
5 4 + PE

Cable material
93 PVC (2 + PE)
94 PUR (2 + PE)
95 PVC (4 poles)
96 PUR (4 poles)
97 PVC (4 + PE)
98 PUR (4 + PE)

Preferred length*
005 0.5 m
010 1.0 m
015 1.5 m
020 2.0 m
050 5.0 m
075 7.5 m
100 10.0 m

* Other cable lengths on request!

M23 signal
encoder cable, straight, screw, ComLock, ComLock-S

Features

• Connector type	M23 signal D-Sub male, angled
• Locking type	Screw ComLock ComLock-S
• Number of contacts	M23: 12 D-Sub: 9
• Degree of protection	IP65 / IP67 when mated

Application

- For harsh industrial environments
- For servo drives
- Standard in acc. to Lenze

Benefits

- 360° shielding
- Cables suitable for industry
- Drag chain compatible
- Fast lock technology ComLock-S compatible with Speedtec locking
- EMC conform

Technical characteristics

Cable structure	Copper conductor in acc. to DIN VDE 0295 cl. 6 Fine wire BS 6360 cl. 6 IEC 60 228 cl. 6
Core structure	3 x (2 x 0.14) mm^2 + (2 x 0.5) mm^2
Sheath material	PUR
Cable sheath diameter	9.8 mm
Shielding	4 shielded pairs
Temperature range	
moved	-30 °C ... +80 °C
fixed	-40 °C ... +80 °C
Bending radius	
moved	10 x cable diameter
fixed	6 x cable diameter
Colour	Black
System	Lenze

M23 signal
encoder cable, straight, screw, ComLock, ComLock-S

Identification	Part number
Encoder cable, M23, 12 pole, straight, female to D-Sub, 9 pole, angled, male	
Screw	
Length 5.0 m	09 48 A06 0847 050
7.5 m	09 48 A06 0847 075
10.0 m	09 48 A06 0847 100
15.0 m	09 48 A06 0847 150
ComLock (fast locking hood for M23 signal)	
Length 5.0 m	09 48 A16 0847 050
7.5 m	09 48 A16 0847 075
10.0 m	09 48 A16 0847 100
15.0 m	09 48 A16 0847 150
ComLock-S (fast locking hood for Speedtec products)	
Length 5.0 m	09 48 A26 0847 050
7.5 m	09 48 A26 0847 075
10.0 m	09 48 A26 0847 100
15.0 m	09 48 A26 0847 150

Drawing — Dimensions in mm

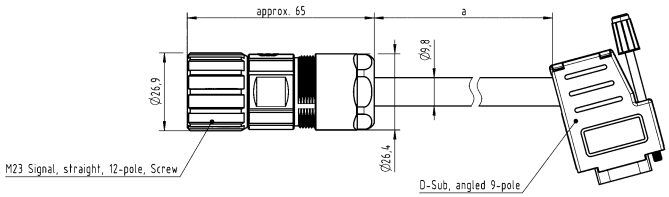

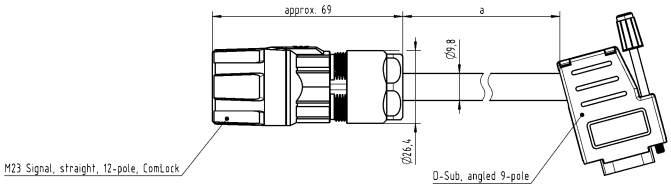

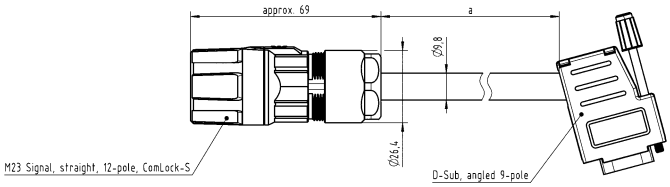

Pin Conn. Loc. A	Wire		Signal	Pin Conn. Loc. B
1	yellow	pair	+Ref	1
2	green		-Ref	2
3	n.c.		+VCC ETS	3
4	grey	pair	+COS	4
5	pink		-COS	5
6	red	pair	+SIN	6
7	blue		-SIN	7
8	n.c.			
9				
10				
11	white	pair	+KTY	8
12	brown		-KTY	9
Shield	Shield			Shield

Other cable lengths on request!

M23 power
motor cable, straight, screw, ComLock, ComLock-S

Features

• Connector type	M23 power
• Locking type	Screw ComLock ComLock-S
• Number of contacts	5 + PE
• Degree of protection	IP65 / IP67 when mated

Application

- For harsh industrial environments
- For servo drives
- Standard in acc. to Lenze

Benefits

- 360° shielding
- Cables suitable for industry
- Drag chain compatible
- Fast lock technology ComLock-S compatible with Speedtec locking
- EMC conform

Technical characteristics

Cable structure	Copper conductor in acc. to DIN VDE 0295 cl. 6 Fine wire IEC 60 228 cl. 6
Core structure	(4 x 1.5 + (2 x 0.5)) mm^2
Sheath material	PUR
Cable sheath diameter	11.5 mm
Shielding	Shielded pair for the control unit and additional overall cable shielding
Temperature range moved fixed	 -30 °C ... +80 °C -40 °C ... +90 °C
Bending radius moved fixed	 7.5 x cable diameter 6 x cable diameter
Colour	Orange
System	Lenze

M23 power
motor cable, straight, screw, ComLock, ComLock-S

Identification	Part number	Drawing	Dimensions in mm
Motor cable, M23, 5 + PE, straight, female			
Screw			
Length 5.0 m	21 37 010 0637 050		
7.5 m	21 37 010 0637 075		
10.0 m	21 37 010 0637 100		
15.0 m	21 37 010 0637 150		
ComLock (fast locking hood for M23 signal)			
Length 5.0 m	21 37 020 0637 050		
7.5 m	21 37 020 0637 075		
10.0 m	21 37 020 0637 100		
15.0 m	21 37 020 0637 150		
ComLock-S (fast locking hood for Speedtec products)			
Length 5.0 m	21 37 030 0637 050		
7.5 m	21 37 030 0637 075		
10.0 m	21 37 030 0637 100		
15.0 m	21 37 030 0637 150		

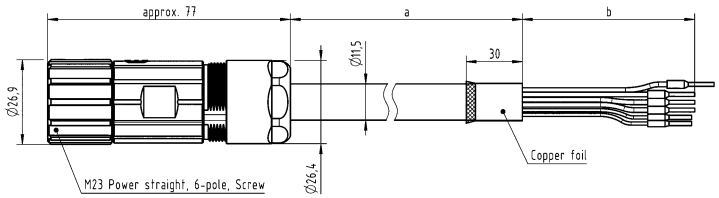

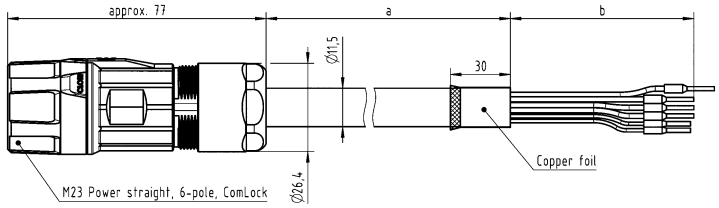

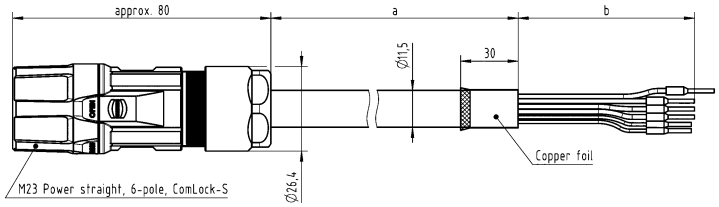

Pin Conn. Loc. A	Wire	Signal	Length b [m]	Pin Conn. Loc. B
1	white	BD1+	0.2	Terminal DIN 46228-4 0.5mm²
2	brown	BD-	0.2	Terminal DIN 46228-4 0.5mm²
4	1	U	0.2	Terminal DIN 46228-4 1.5mm²
5	2	V	0.2	Terminal DIN 46228-4 1.5mm²
6	3	W	0.2	Terminal DIN 46228-4 1.5mm²
PE (3)	green/yellow	PE	0.22	Terminal DIN 46228-4 1.5mm²
Shield	Shield			

Other cable lengths on request!

Notes

Contents | Page

Technical characteristics

RoHS	compliant

Identification	Conductor cross-section (mm²)	Part number	
Crimping tool, for turned male and female contact, 4 indent crimp in acc. to MIL 22 520/2-01	0.09 ... 0.82	09 99 000 0501	
Locator, for single D-Sub standard contacts		09 99 000 0531	
Locator, for part number 09 99 000 0501 and Data- und Power contacts Y-coding		09 99 000 0618	
Locator, for *har*-speed M12 male contacts		09 99 000 0525	
Locator, for *har*-speed M12 female contacts		09 99 000 0635	
Locator, for M12 male contacts, 21 01 100 9020		61 03 600 0023	
Locator, for M12 female contacts, 21 01 100 9025		09 99 000 0637	

Crimping tool

Identification	Conductor cross-section (mm²)	Part number	
Crimping tool, for power contacts	0.5 ... 2.5	09 99 000 0509	
Locator, for part number 09 99 000 0509		09 99 000 0638	

Crimping tool

Identification	Wrench size	Part number	
Crimping tool, for flange Head openable		09 99 000 0647	
Crimping insert, for part number 09 99 000 0647	6.5 7 7.5 8 8.5 9 9.5 10	09 99 000 0652 09 99 000 0648 09 99 000 0649 09 99 000 0650 09 99 000 0658 09 99 000 0653 09 99 000 0654 09 99 000 0655	

Identification	Conductor cross-section (mm²)	Part number	
Circular connectors M23, Crimping tool, for M23 signal contacts, Pack contents: incl. locator, Handling instruction	0.08 ... 2.5	09 99 000 0890	
Circular connectors M23, Crimping tool, for M23 power contacts, for M23 signal contacts, Pack contents: incl. locator, Handling instruction Not to be used for 0.6 mm contacts.	0.14 ... 4	09 99 000 0896	
Circular connectors M23, Crimping tool, for shielded bushing		09 99 000 0898	
Circular connectors M23, Locator, for 0.6 mm data contacts, for crimping tool 09 99 000 0890		09 99 000 0961	

Assembly tool

Identification	Wrench size	Part number	Drawing (dimensions in mm)
Assembly tool, for flange		09 99 000 0639	
Dynamometric screwdriver, for M12 Power	18	09 99 000 0659	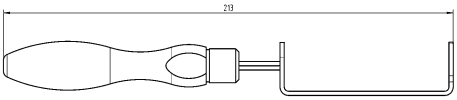
Dynamometric screwdriver, for M8	9 13	09 99 000 0380 09 99 000 0660	 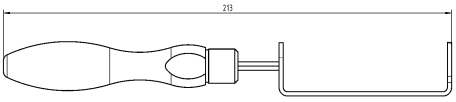
Dynamometric screwdriver, for M12-S	13	09 99 000 0382	
Dynamometric screwdriver, for M12-L	17	09 99 000 0384	
Dynamometric screwdriver, for M12 Slim Design	15	09 99 000 0646	
Dynamometric screwdriver, for 7/8”	22	09 99 000 0395	
Assembly tool, for preLink® terminal module		20 82 000 9901	

Stripping tools

Identification	Conductor cross-section (mm²)	Part number	
Stripping tool	0.08 ... 10	09 99 000 0159	
Stripping tool, Pack contents: Stripping blade set, Straight	0.03 ... 16	09 99 000 0980	
Stripping blade set, Straight		09 99 000 0981	
Stripping blade set, Oval	10 ... 16	09 99 000 0982	
Stripping blade set, V-shape		09 99 000 0983	

Sales Network – worldwide

Armenia:
refer to Russia

Australia
HARTING Pty. Ltd.
Suite 11 / 2 Enterprise Drive Bundoora
3083, University Hill Melbourne, Victoria
Phone 1800 201 081 (toll free calling within AUS)
+61 3 9466 7088
au@HARTING.com

Australia and Oceania:
refer to Australia

Austria
HARTING Ges.m.b.H.
Deutschstraße 19
1230 Wien
Phone +43 161 621 21
at@HARTING.com

Azerbaijan:
refer to Turkey

Baltic States:
refer to Finland

Belarus:
refer to Russia

Belgium
HARTING N.V.
Z.3 Doornveld 23
1731 Zellik
Phone +32 2 466 0190
be@HARTING.com

Bosnia Herzegovina:
refer to Austria

Brazil
HARTING Ltda.
Alameda Caiapós, 643
06460-110- Barueri - São Paulo
Phone +55 11 5035 0073
br@HARTING.com

Canada
HARTING Canada Inc.
475 Dumont Avenue
Suite 300
Dorval, Quebec, H9S 5W2
Phone +1 855 659-6653
info.ca@HARTING.com

Central America and the Caribbean:
refer to USA

Central Asia:
refer to Russia

China
HARTING (Zhuhai) Sales Ltd.
Room 3501, Grand Gateway I
No. 1 Hong Qiao Road
Xu Hui District
Shanghai 200030
Phone +86 21 3418 9758
cn@HARTING.com

Croatia:
refer to Austria

Czech Republic
HARTING s.r.o.
Mlýnská 2
160 00 Praha 6
Phone +420 220 380 495
cz@HARTING.com

Denmark
HARTING ApS
Resilience House
Lysholt Allé 8
7100 Vejle
Phone +45 70 25 00 32
dk@HARTING.com

Finland
HARTING Oy
Teknobulevardi 3-5
01530 Vantaa
Phone +358 207 291 510
fi@HARTING.com

France
HARTING France
ZAC Paris Nord 2
181 avenue des Nations
95934 ROISSY CDG
Phone +33 1 4938 3400
fr@HARTING.com

Germany
HARTING Deutschland
GmbH & Co. KG
Simeonscarré 1, D-32427 Minden
Phone +49 571 8896 0
de@HARTING.com

Georgia:
refer to Russia

Great Britain
HARTING Limited
Caswell Road
Brackmills Industrial Estate
NN4 7PW GB – Northampton
Phone +44 1604 82 75 00
salesuk@HARTING.com

Greece:
refer to Italy

Hong Kong
HARTING (HK) Limited
Regional Office Asia Pacific
3512, Metroplaza Tower 1
223 Hing Fong Road
Kwai Fong, N. T.
Phone +852 2423 7338
ap@HARTING.com

Hungary
HARTING Magyarország Kft.
Fehérvári út 89-95
1119 Budapest
Phone +36 1 205 34 64
hu@HARTING.com

India
HARTING (India) Private Limited
7th Floor (West Wing)
Central Square II
Unit No.B 19 part, B 20 & 21
TVK Industrial Estate
Guindy, Chennai 600032
Phone +91-44-43560415
in@HARTING.com

Ireland:
refer to Great Britian

Israel:
refer to Turkey

Italy
HARTING S.R.L.
Via dell‘ Industria 7
20090 Vimodrone (MI)
Phone +39 02 250801
it@HARTING.com

Japan
HARTING K.-K.
Yusen Shin-Yokohama
1 Chome Bldg., 2F 1-7-9,
Shin-Yokohama, Kohoku-ku
Yokohama 222-0033
Phone +81 45 476 3456
jp@HARTING.com

Sales Network – worldwide

Korean Republic
HARTING Korea Co. Ltd.
B-B108, Woolim Lions Valley 5th
302 Galmachi-ro, Jungwon-gu
Seongnam-si, Gyeonggi-do 13201
Phone +82 31 750 0380
kr@HARTING.com

Kosovo:
refer to Austria

Macedonia:
refer to Austria

Malta:
refer to Italy

Mexico
HARTING Mexico S.A. de C.V.
IOS Torre Virreyes
Pedregal No. 24, Co. Molino Del Rey
Suites 357 A, B, C
Del Miguel Hidalgo, Mexico D.F. 11600
Phone +1 800 123 0415
HARTING.mexico@HARTING.com

Middle East:
refer to United Arab Emirates

Montenegro:
refer to Austria

Netherlands
HARTING B.V.
Larenweg 44
5234 's-Hertogenbosch
Phone +31 736 410 404
nl@HARTING.com

Norway
HARTING A/S
Østensjøveien 36
0667 Oslo
Phone +47 22 700 555
no@HARTING.com

Pakistan:
refer to United Arab Emirates

Poland
HARTING Polska Sp. z o.o.
ul. Duńska 11
54-427 Wrocław
Phone +48 71 352 81 71
pl@HARTING.com

Romania
HARTING Romania SCS
Str. Europa Unita nr 21
550018 Sibiu
Phone +40 369 102 610
ro@HARTING.com

Russia
LLC HARTING
Sverdlovskaya nab., 44, lit. Yu, office 612
195027, St. Petersburg
Phone +7 812 327 6477
ru@HARTING.com

Serbia:
refer to Austria

Singapore
HARTING Singapore Pte. Ltd.
25 International Business Park
#04-108 German Centre
SGP-Singapore 609916
Phone +65 6225 5285
sg@HARTING.com

Slovakia
HARTING s.r.o.
Slovakia branch
Štefániková Trieda 71, (areál pivovaru)
949 01 Nitra
Phone +421 37 655 9089
sk@HARTING.com

Slowenia:
refer to Austria

South Africa
HARTING South Africa Proprietary Limited
Ground Floor, Twickenham Building
The Campus, Cnr Main & Sloane Street
Bryanston
Johannesburg (Bryanston)
2021
Phone +27 (0) 11 575 0017
za@HARTING.com

South America:
refer to Brazil

South Asia:
refer to Singapore

South Pacific:
refer to Australia

Spain
HARTING Iberia S.A.U.
C/Viriato, 47 8º Planta
Edificio Numancia, 1
08014 Barcelona
Phone +34 933 638 484
es@HARTING.com

Sub-Sahara countries:
refer to South Africa

Sweden
HARTING AB
Gustavslundsvägen 141B
167 51 Bromma
Phone +46 8 445 7171
se@HARTING.com

Switzerland
HARTING AG
Volketswil branch
Hofwiesenstrasse 4 A
8604 Volketswil
Phone +41 44 908 20 60
ch@HARTING.com

Taiwan
HARTING Taiwan Ltd.
Room 1, 5/F, 495 GuangFu South Road
RC-110 Taipei
Phone +886 227 586 177
tw@HARTING.com

Turkey
HARTING Türkei Elektronik Ticaret Limited Sirketi
Bayar Cad. Şehit İlknur Keleş Sok.
Dural Plaza No:3 K.11
34742 Kozyatagı – Istanbul
Phone +90 216 688 81 00
tr@HARTING.com

Ukraine:
refer to Poland

United Arab Emirates
HARTING Middle East FZ-LLC
Knowledge Village
Block 2A - Office F72
P.O. Box: 454372
Dubai
Phone +971 4 453 9737
uae@HARTING.com

HARTING Inc. of North America
1370 Bowes Road
USA-Elgin, Illinois 60123
Phone +1 847 741 1500
us@HARTING.com

Distributors

Distributors – worldwide

ARROW: www.arrow.com

Digi-Key Corporation: www.digikey.com

Farnell: www.farnell.com

FUTURE Electronics:
www.futureelectronics.com

HEILIND Electronics:
www.heilind.com

Mouser Electronics: www.mouser.com

RS Components: www.rs-components.com

Other countries and general contact

HARTING
Electric GmbH & Co. KG

P.O. Box 1473
D-32328 Espelkamp
Germany

Phone +49 5772/47-97100

electric@HARTING.com
www.HARTING.com

HARTING
Electronics GmbH

P.O. Box 1433
32328 Espelkamp
Germany

Phone +49 5772/47-97200

electronics@HARTING.com
www.HARTING.com

Pushing Performance

HARTING.com –
the gateway to your
country website.

HARTING Technology Group
info@HARTING.com
www.HARTING.com

2020-05-13 | only available as pdf | version 18 9